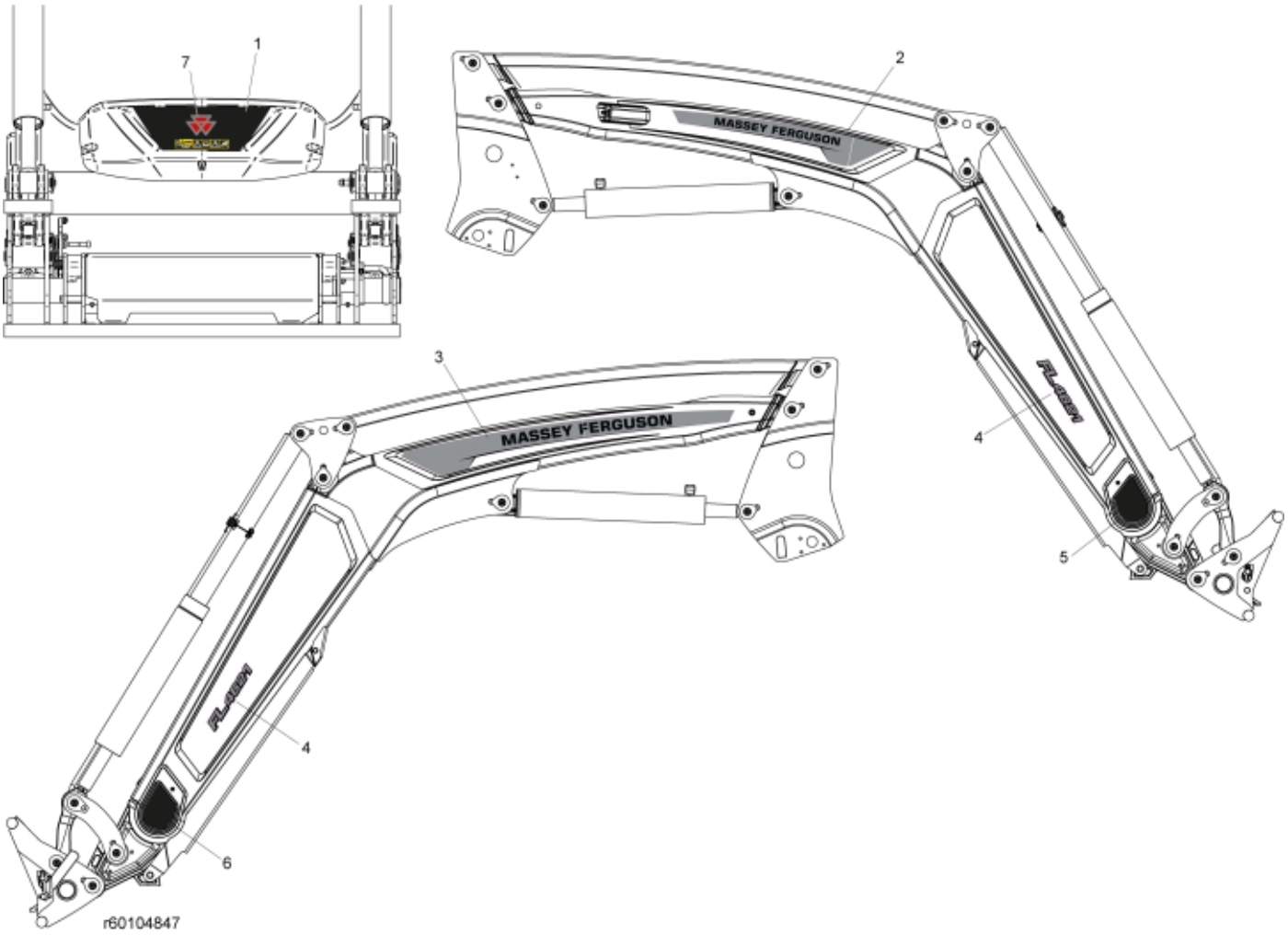
1
7
2
MASSEY FERGUSON
FLOEN
4
5
3
MASSEY FERGUSON
FLOEN
4
6
r60104847

© 2025 Jost

Description	FL4621
Part assemblies	Decals
Specification	Year From: 9/1/2024 12:00:00 AM

PartNo	Pos	Qty	Name	Specifications
60108090	1	1	Decal	Centre Cover
60103311	2	1	Decal Brand, RH	
60103310	3	1	Decal Brand, LH	
60103292	4	2	Decal, Model	FL4621
60108092	5	1	Decal RH	Cover, large
60108093	6	1	Decal LH	Cover, large
60103941	7	1	Decal	MF Centre Cover

© 2025 Jost