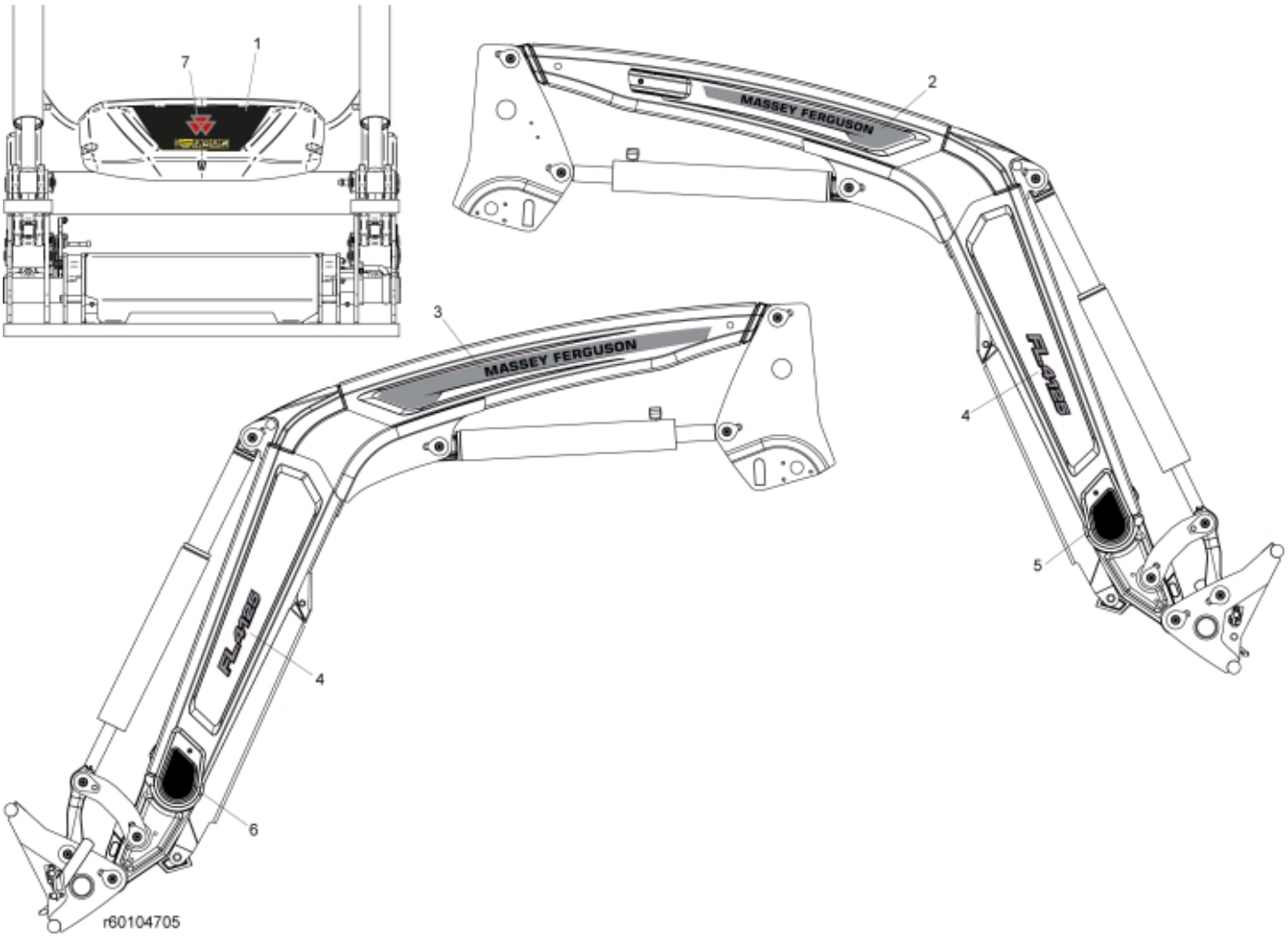

© 2025 Jost

Description	FL4125
Part assemblies	Decals
Specification	Year From: 9/1/2024 12:00:00 AM

PartNo	Pos	Qty	Name	Specifications
60108090	1	1	Decal	Centre Cover
60103001	2	1	Decal Brand, RH	
60102994	3	1	Decal Brand, LH	
60103271	4	2	Decal, Model	FL4125
60022989	5	1	Decal RH	Cover, small
60108091	6	1	Decal LH	Cover, small
60103941	7	1	Decal	MF Centre Cover

© 2025 Jost