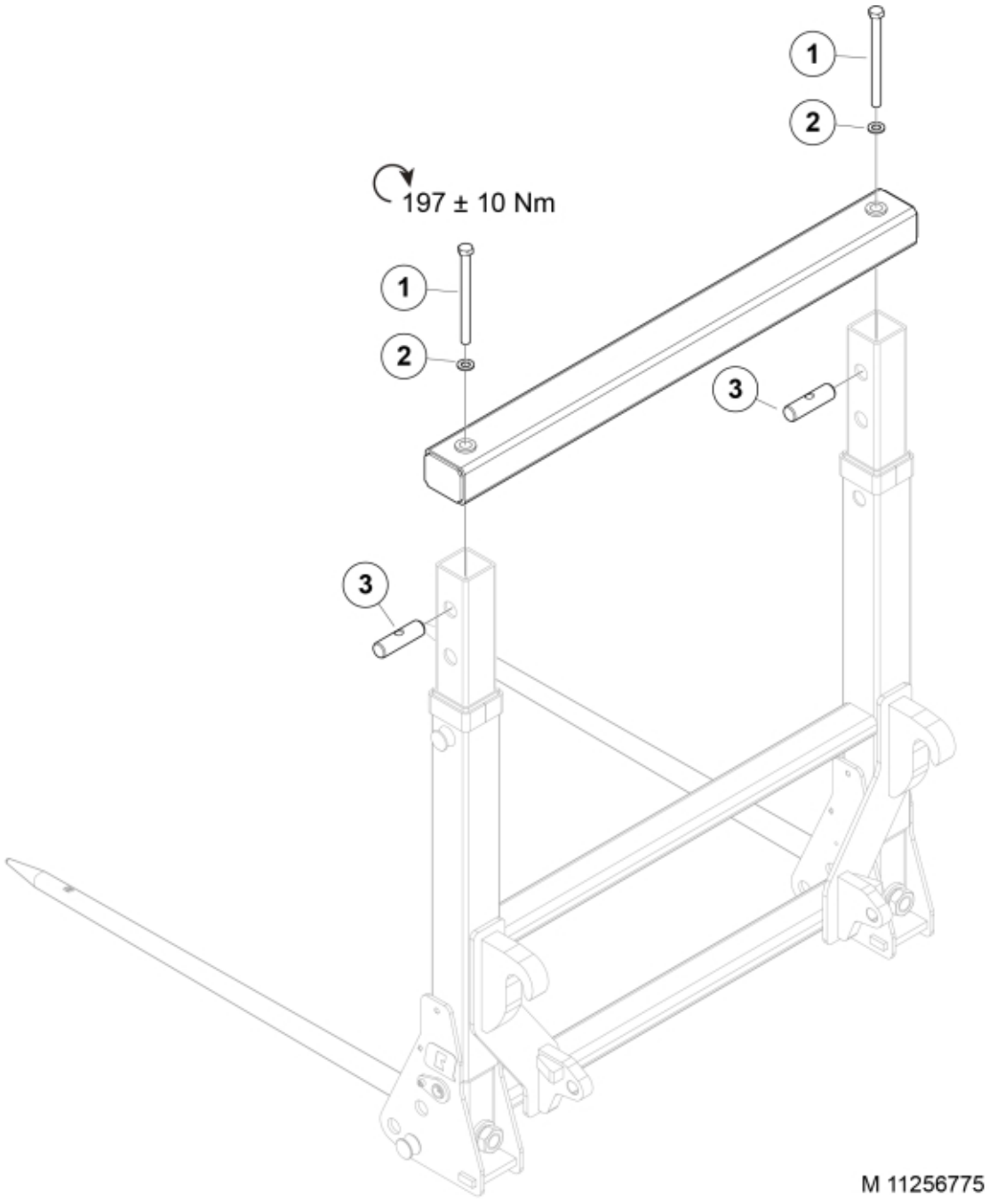

© 2025 Jost

Part assemblies Cross bar

PartNo	Pos	Qty	Name	Specifications
5002165	1	2 PCS	Screw	M6S M16 x 200
5013105	2	2	Washer	BRB 17 x 30 x 3 300HV
60050943	3	2	Barrel nut	

© 2025 Jost