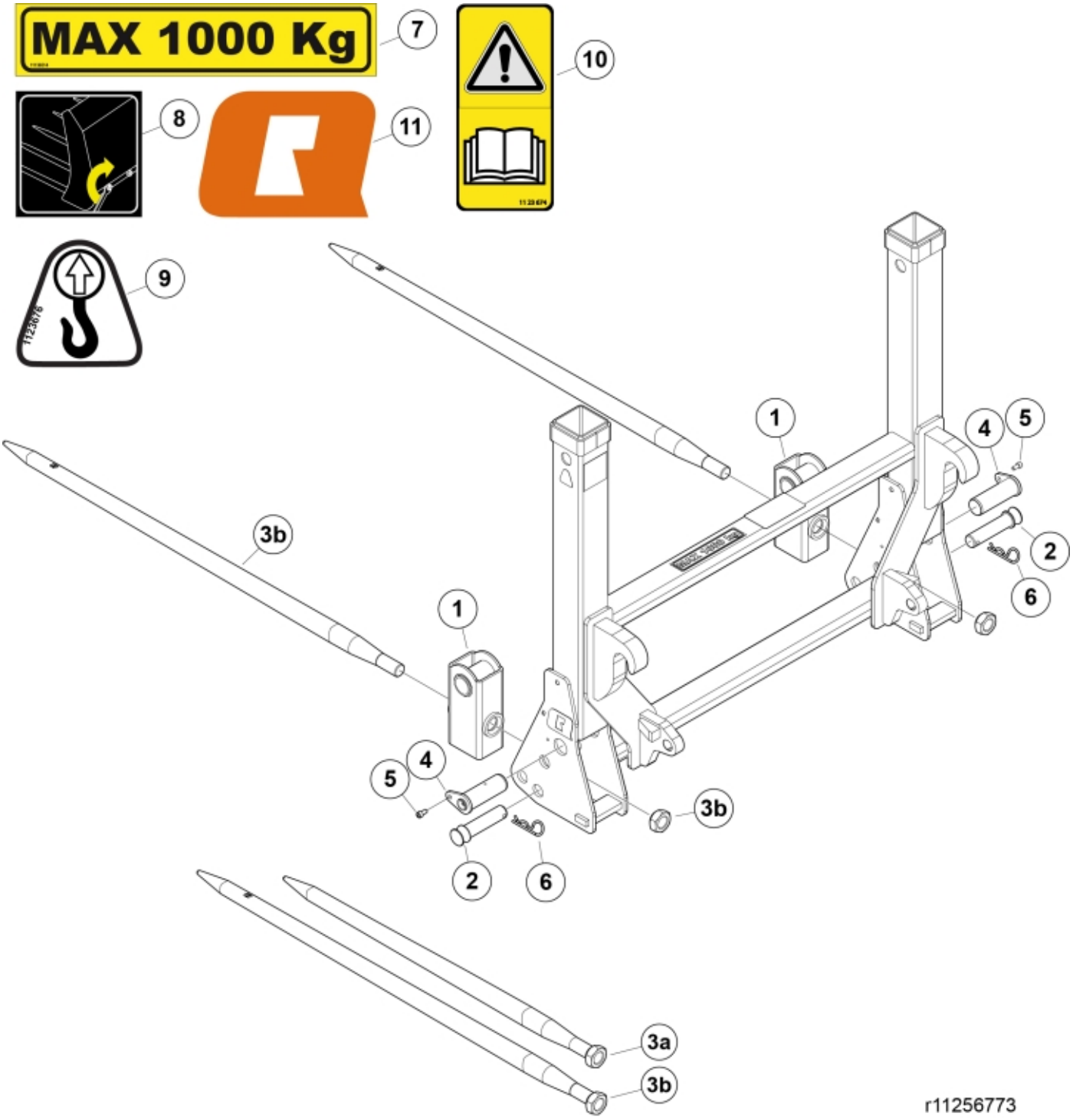

© 2025 Jost

Part assemblies Bale fork S+ 115 Euro Folding tines

PartNo	Pos	Qty	Name	Specifications
60111312	1	2	Bracket	
60050941	2	2 PCS	Pin	
5068114-17	3a	2	Tine with nut	L=827mm (replaces 5068003)
5068120-17	3b	2	Tine with nut	L=1240mm (5068004)
60111442	4	2	Pin	
5053514	5	2	Screw	M6S M8x16 (8.8) Threadlock
20725101	6	2	Linch pin	
11136514	7	1	Warning decal	"Max 1000 kg"
11136517	8	1	Warning decal	"Tightening of tine"
1123676	9	2	Decal, lift	
1123674	10	1	Warning decal	"Read manual"
60049053	11	2	Decal	"Q" small 80x57

© 2025 Jost