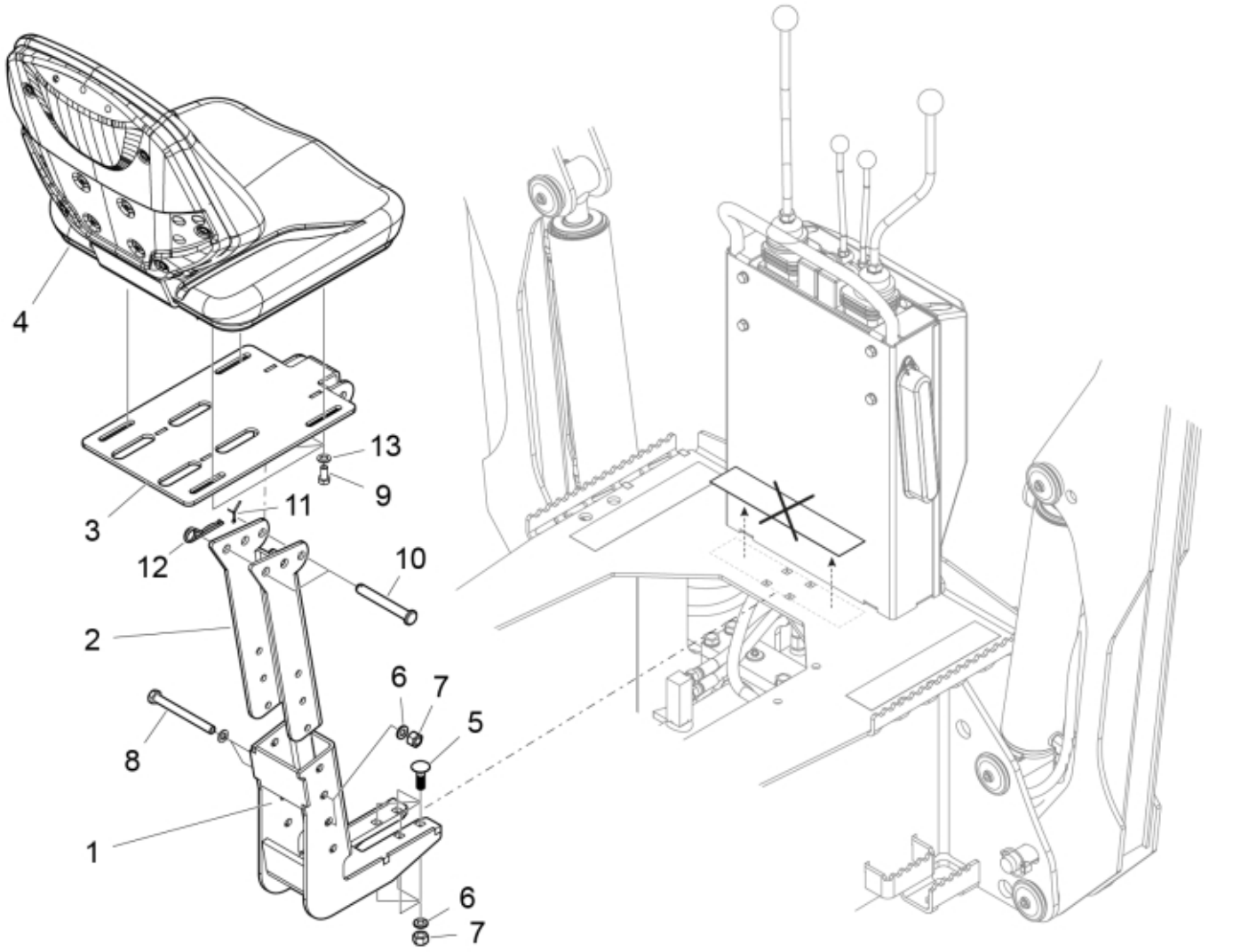


M 60117039 BH Seat


© 2025 Jost

**Part assemblies** Seat kit

| PartNo | Pos | Qty | Name | Specifications |
|---|---|---|---|---|
| 60075391 | 1 | 1 | Frame | |
| 60127911 | 2 | 1 | Bracket | |
| 60075916 | 3 | 1 | Bracket | |
| 60127426 | 4 | 1 | Seat | |
| 5053380 | 5 | 4 | Screw | MK6S M10x35 |
| 5013102 | 6 | 8 | Washer | BRB 10 x 18 x 2 |
| 5011554 | 7 | 6 | Nut | Loc-King M10 |
| 5002081 | 8 | 2 | Screw | M6S M10 x 110 (8.8) |
| 5002058 | 9 | 4 | Screw | M6S 8x16 |
| 6100268 | 10 | 2 | Locking Pin | |
| 5016997 | 11 | 1 | Split pin | |
| 5221186 | 12 | 1 | Pin clip | □ 12x120 |
| 5013101 | 13 | 4 | Washer | BRB 8,4 x 16 |


© 2025 Jost