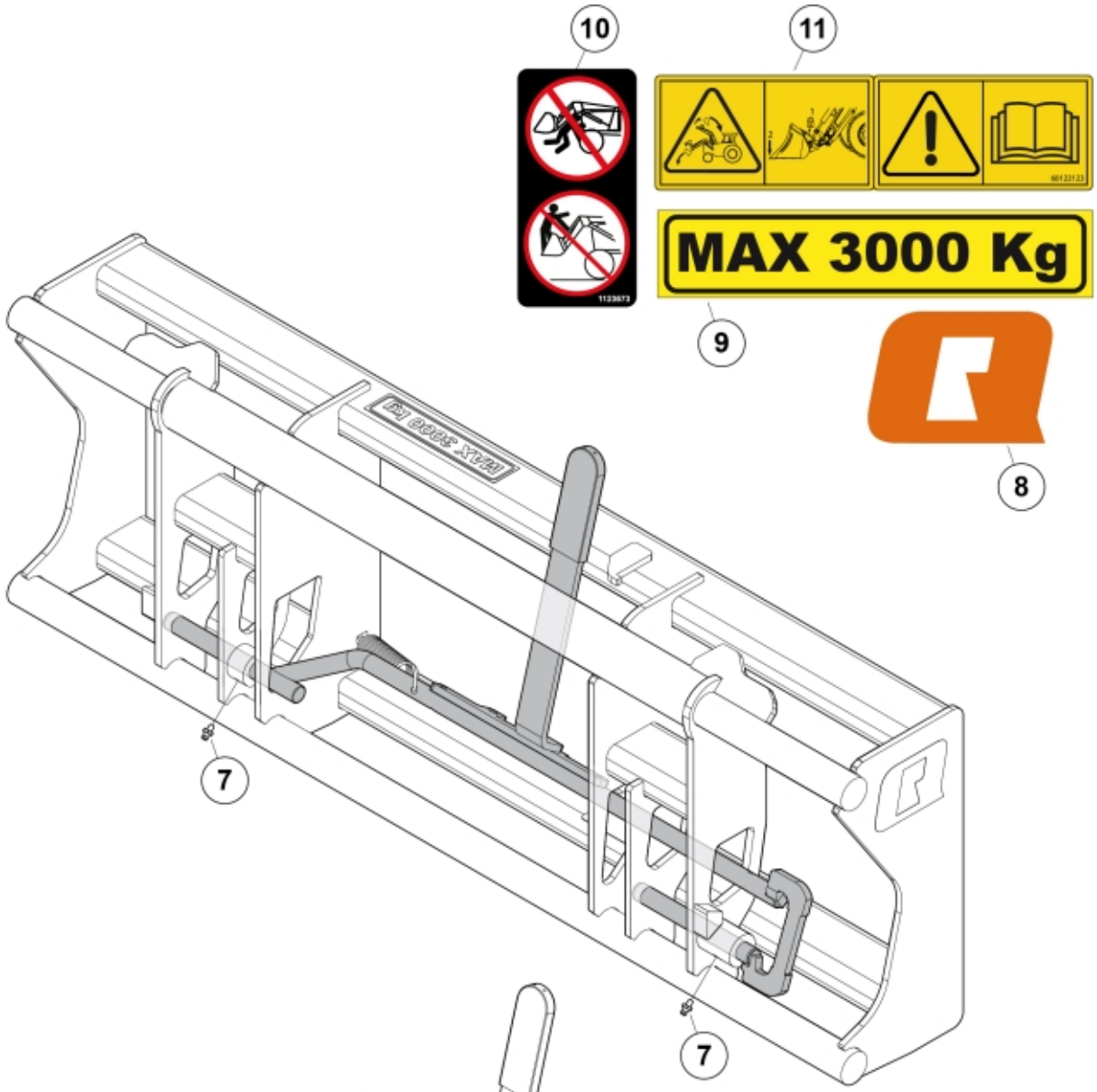

M 11256509

© 2025 Jost

Part assemblies Adapter kit

PartNo	Pos	Qty	Name	Specifications
60039171	1	1	Locking mechanism	
60092532	2	1	Lever	
1101035	3	1	Spring	
5050573	4	2	Screw	M6S M8x45
5011553	5	2	Nut	M6M M8 Loc-king
60039148	6	1	Plastic handle	
5023005	7	2	Greaser	M 10 x 1
60056616	8	2	Decal	"Q" medium 110mm
60101017	9	1	Warning decal	"Max 3000 kg"
1123673	10	1	Warning decal	
60122123	11	1	Warning decal	

© 2025 Jost