Quicke

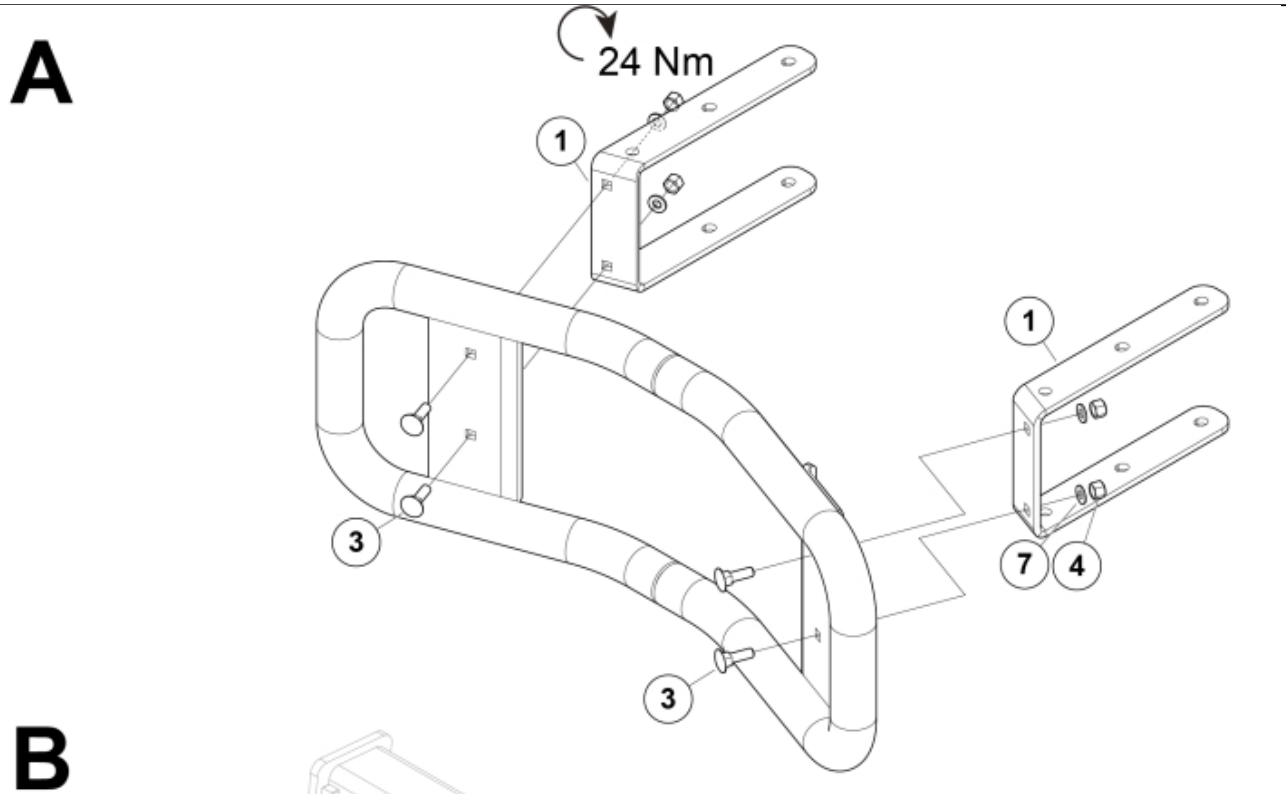

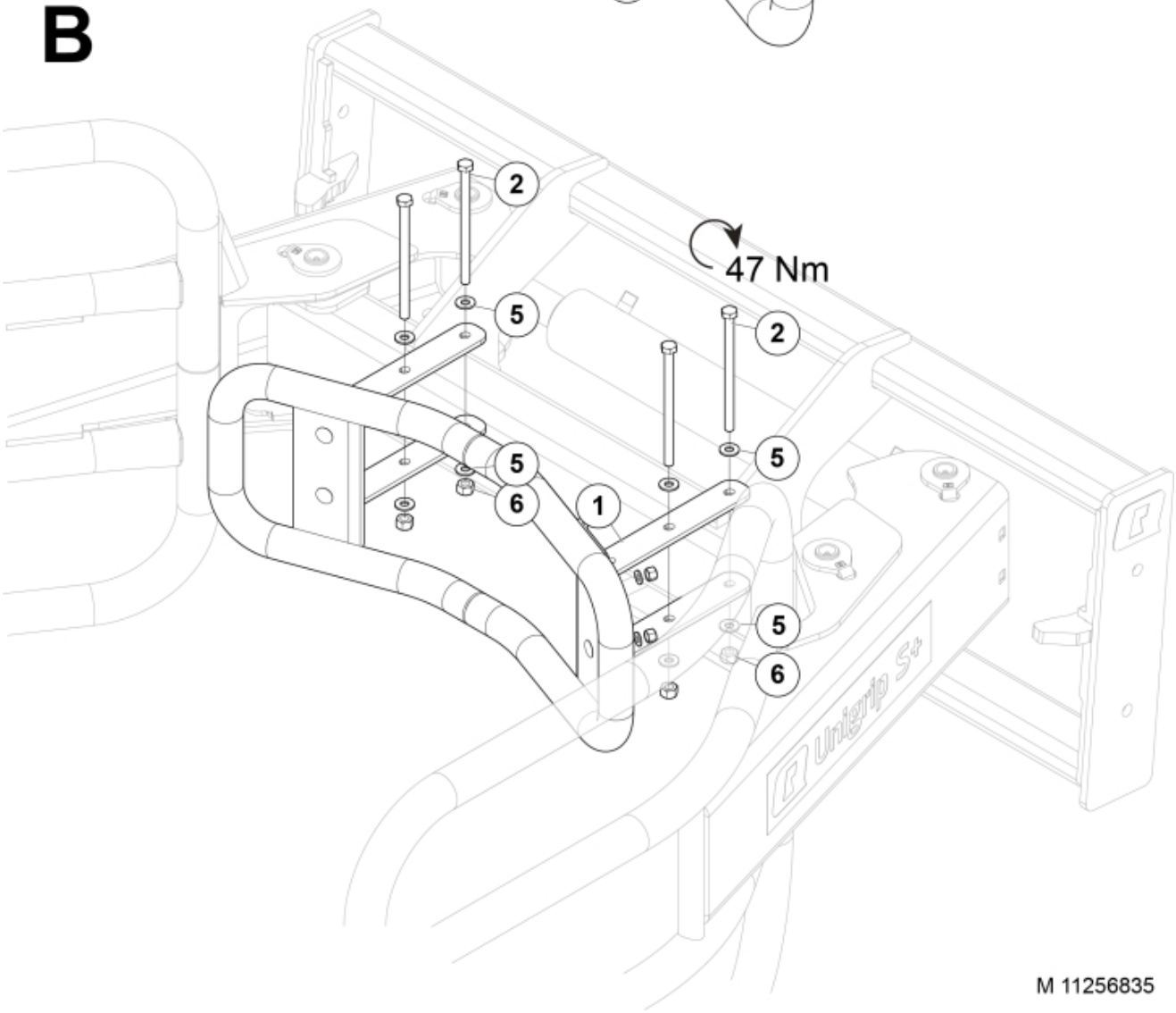

© 2025 Jost

Part assemblies Bale support

PartNo	Pos	Qty	Name	Specifications
	1	1	Bracket	
	2	2	Screw	M6S M10x160 (8.8)
	3	4	Screw	MVBF M8x30 (4.6)
	4	4	Nut	M6M M8 Loc-king
	5	8	Washer	BRB 10.5x22x2
	6	4	Nut	Loc-King M10
	7	4	Washer	BRB 8,4 x 16

© 2025 Jost