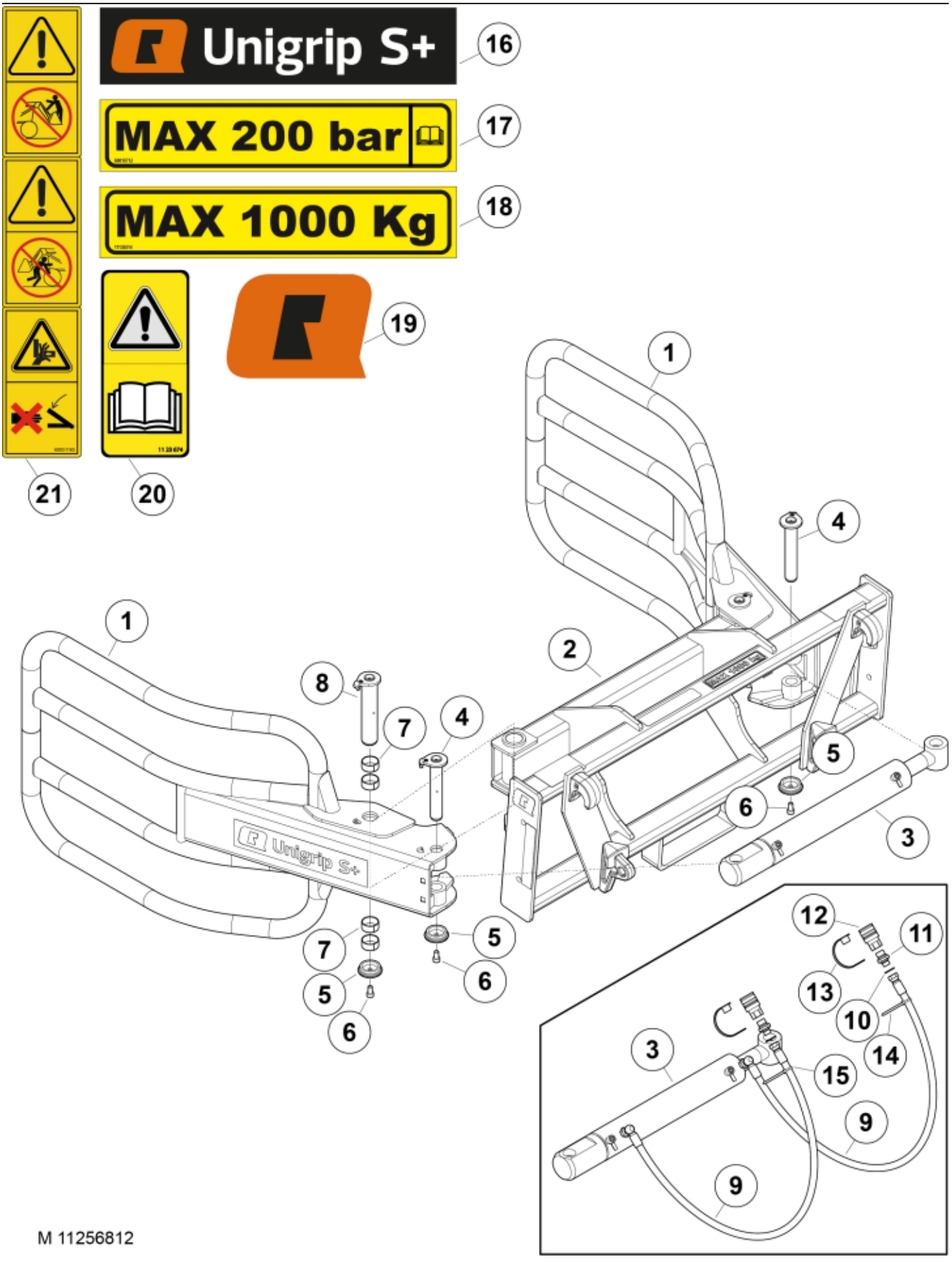

M 11256812

© 2025 Jost

Part assemblies Unigrip S+ Euro

PartNo	Pos	Qty	Name	Specifications
60112330-17	1	2	Arm	
60114650-17	2	1	Frame	
60114464-1	3	1	Cylinder	
60114471	4	2	Pin	
5215131	5	4	Locking cover	
5050608	6	4	Screw	MC6S M10x20 Loc
5018513	7	8	Bushing	D40 L=20
60114470	8	2	Pin	
1103117	9	2	Hose	3/8"
5013604	10	2	Washer	Copper 21x28x2
1120011	11	2	Adaptor	R1/2"-R3/8"
5044127	12	2	Quick Coupling	1/2", Part is included in kit 60007907 Hose cpl., 9032177 Hose cpl.
5044130	13	2	Dust Cover	Part is included in kit 60007907 Hose cpl., 9032177 Hose cpl.
5022179	14	1	Cable tie	Blue
5022177	15	1	Cable tie	Red
60115728	16	2	Decal	"Unigrip S+"
60018712	17	1	Warning decal	
11136514	18	1	Warning decal	"Max 1000 kg"
60049053	19	2	Decal	"Q" small 80x57
1123674	20	1	Warning decal	"Read manual"
60051165	21	1 PCS	Warning decal	

© 2025 Jost