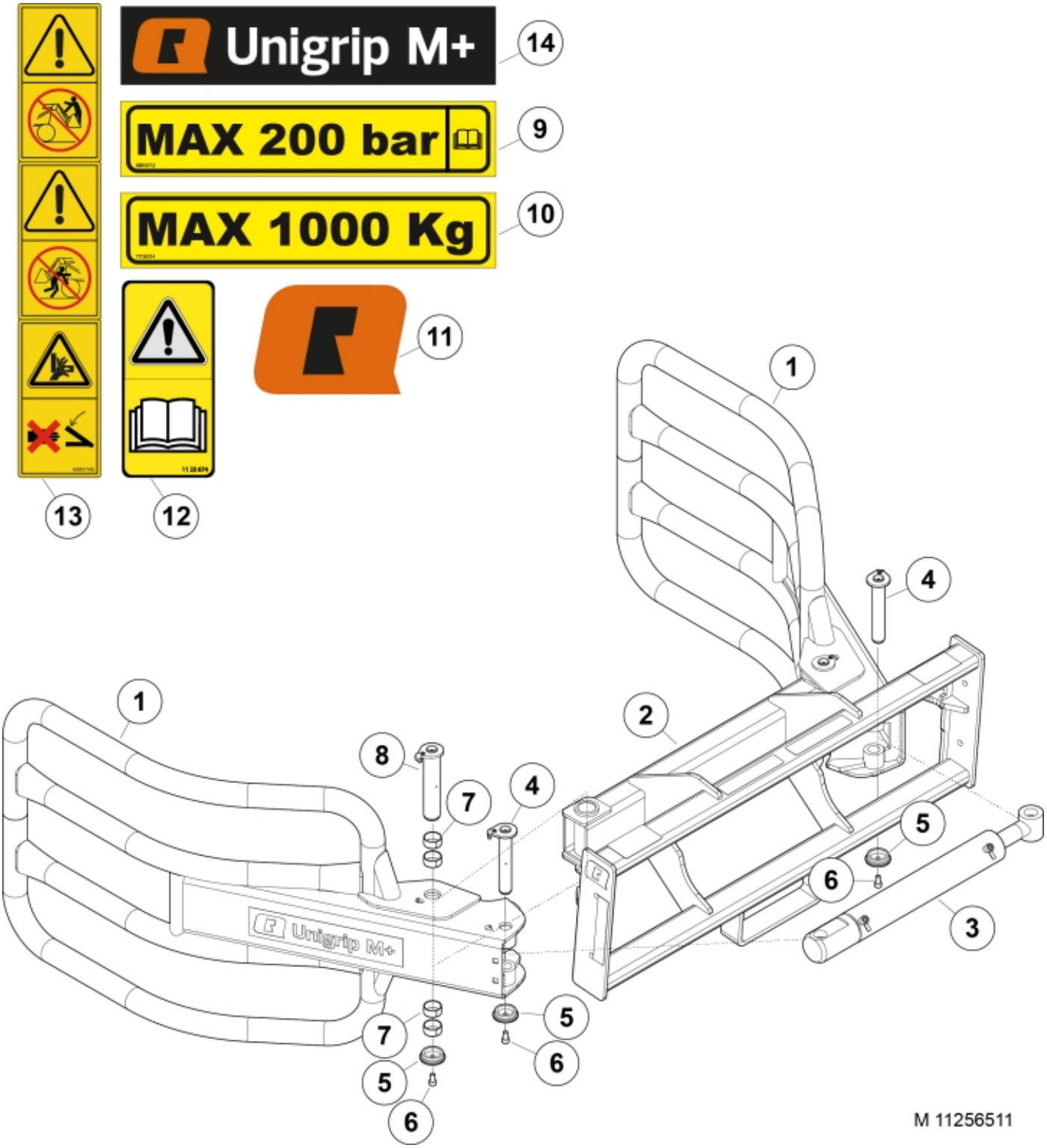
Unigrip M+
MAX 200 bar
MAX 1000 Kg
1
2
3
4
5
6
7
8
9
10
11
12
13
14
M 11256511

© 2025 Jost

Part assemblies Unigrip M+

PartNo	Pos	Qty	Name	Specifications
60109999-17	1	2	Arm	
60111901-17	2	1	Frame	
60114464-1	3	1	Cylinder	
60114471	4	2	Pin	
5215131	5	4	Locking cover	
5050608	6	4	Screw	MC6S M10x20 Loc
5018513	7	8	Bushing	D40 L=20
60114470	8	2	Pin	
60018712	9	1	Warning decal	
11136514	10	1	Warning decal	"Max 1000 kg"
60049053	11	2	Decal	"Q" small 80x57
1123674	12	1	Warning decal	"Read manual"
60051165	13	1 PCS	Warning decal	
60115726	14	2	Decal	"Unigrip M+"

© 2025 Jost