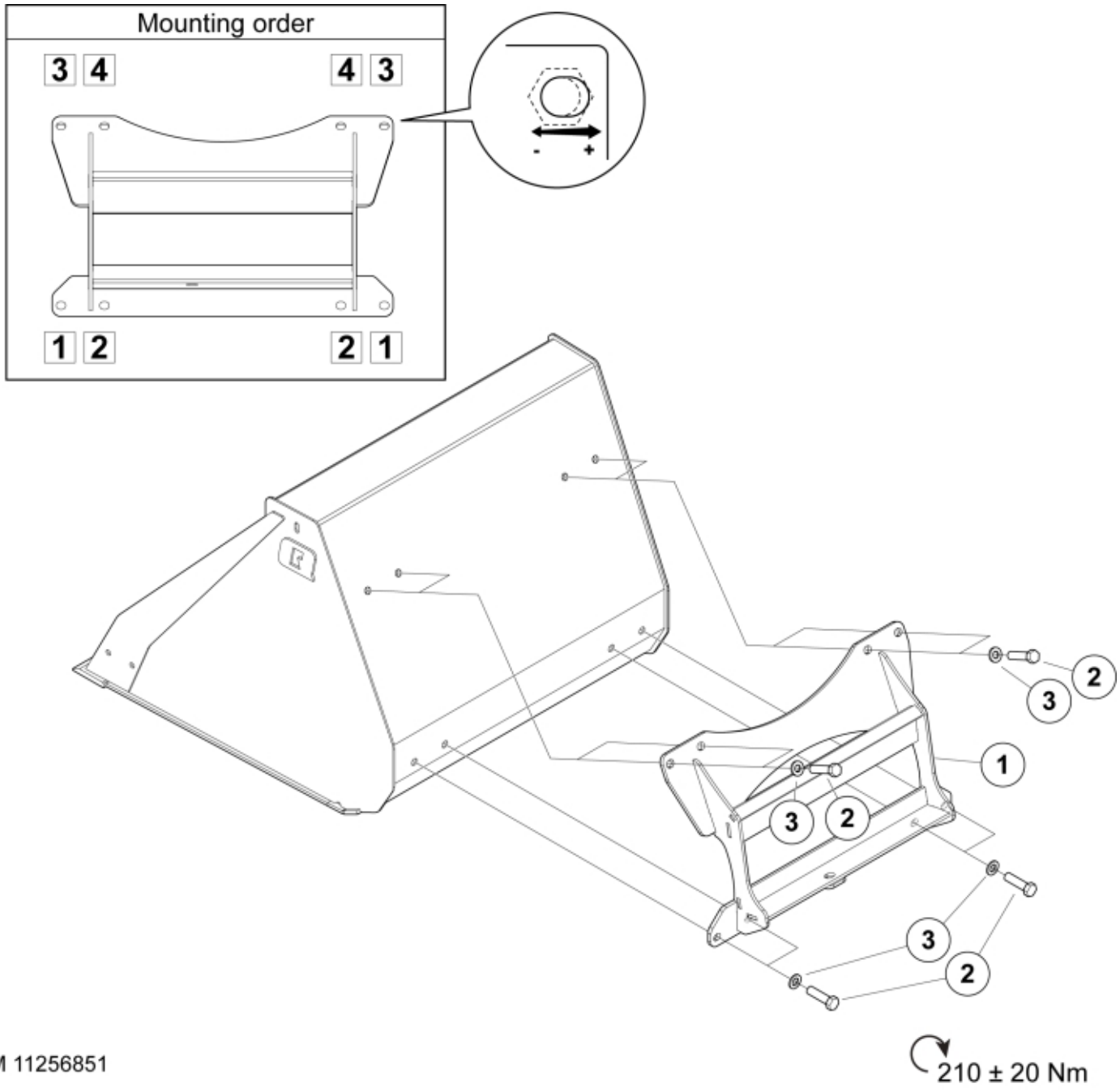

© 2025 Jost

Part assemblies Attachment kit Knikmops 80-100

PartNo	Pos	Qty	Name	Specifications
60117903	1	1	Attachment Knikmops 80-100	
60047988		1	Bolt kit	M16
5002153	2	8	• Screw	M6S M16 x 45
5051493	3	8	• Washer	M16

© 2025 Jost