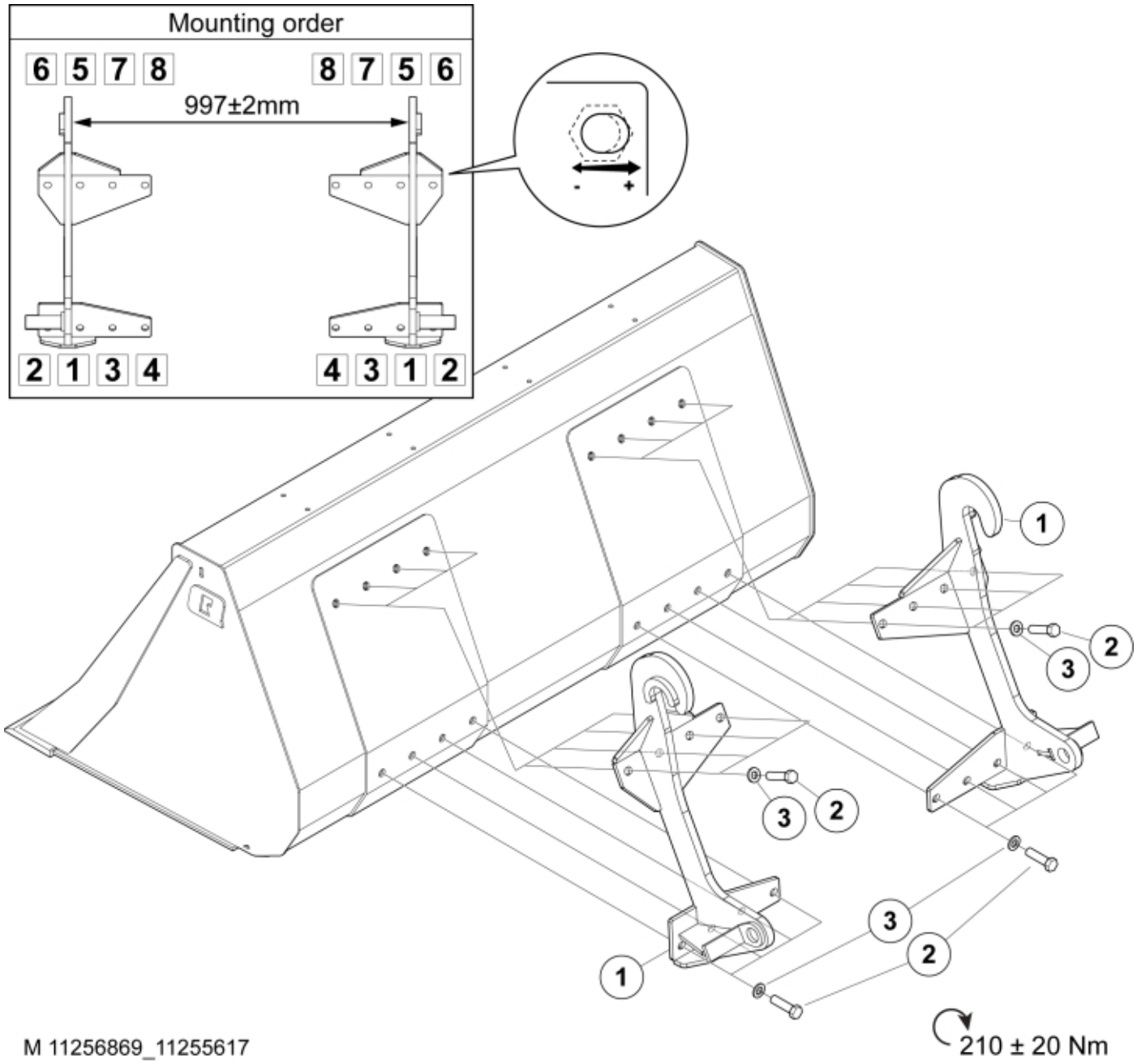
Mounting order
6 5 7 8
8 7 5 6
997±2mm
2 1 3 4
4 3 1 2
1
2
3
2
3
1
3
2
M 11256869_11255617
210 ± 20 Nm

© 2025 Jost

Part assemblies Attachment kit JCB Qfit 2°

PartNo	Pos	Qty	Name	Specifications
60118418	1	1	Attachment JCB Qfit 2°	
60047988		2	Bolt kit	M16
5002153	2	8	• Screw	M6S M16 x 45
5051493	3	8	• Washer	M16

© 2025 Jost