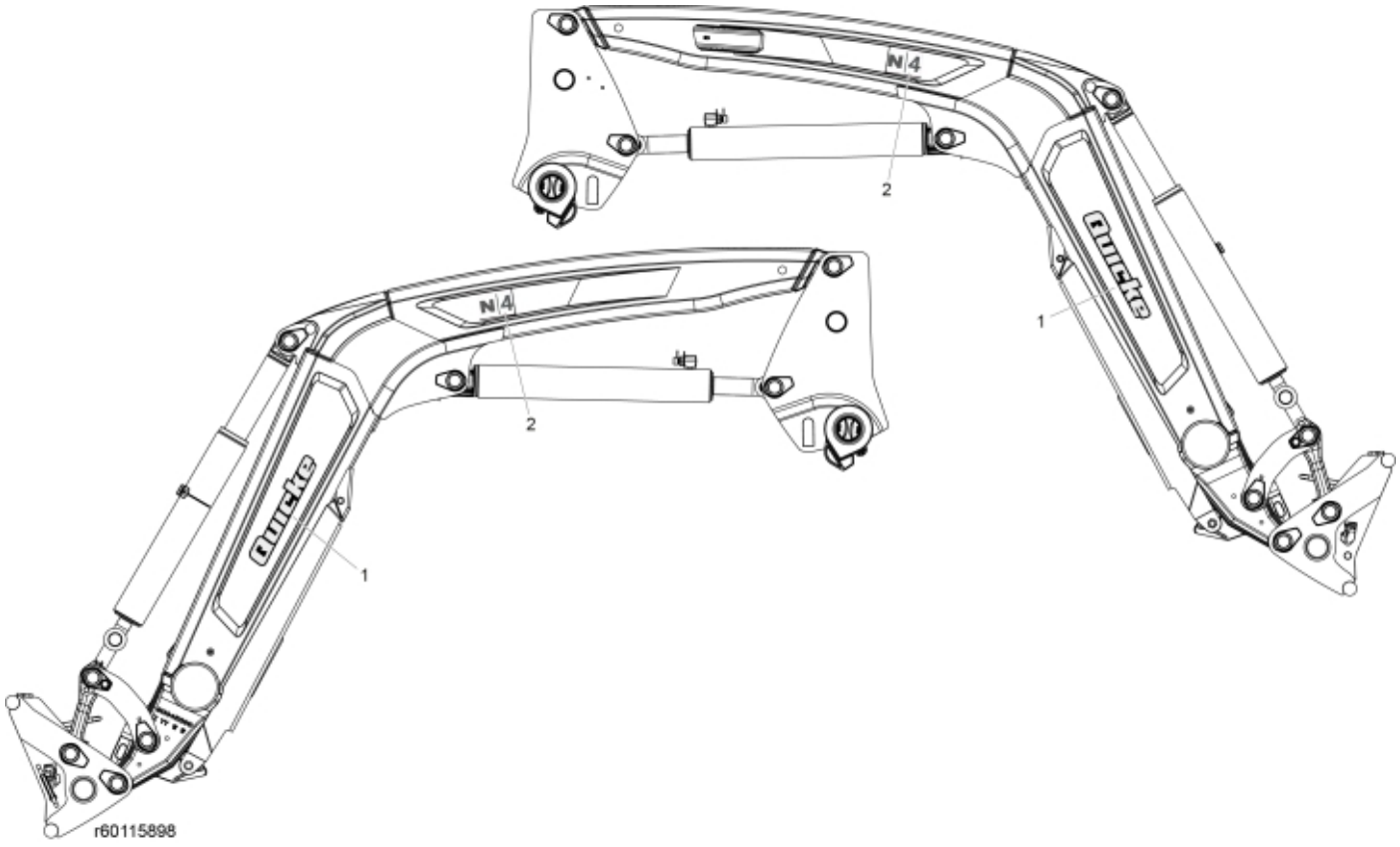

© 2025 Jost

Part assemblies Decals

PartNo	Pos	Qty	Name	Specifications
60125859	1	2	Decal, Brand	Quicke
60116087	2	2	Decal, Model	N4

© 2025 Jost