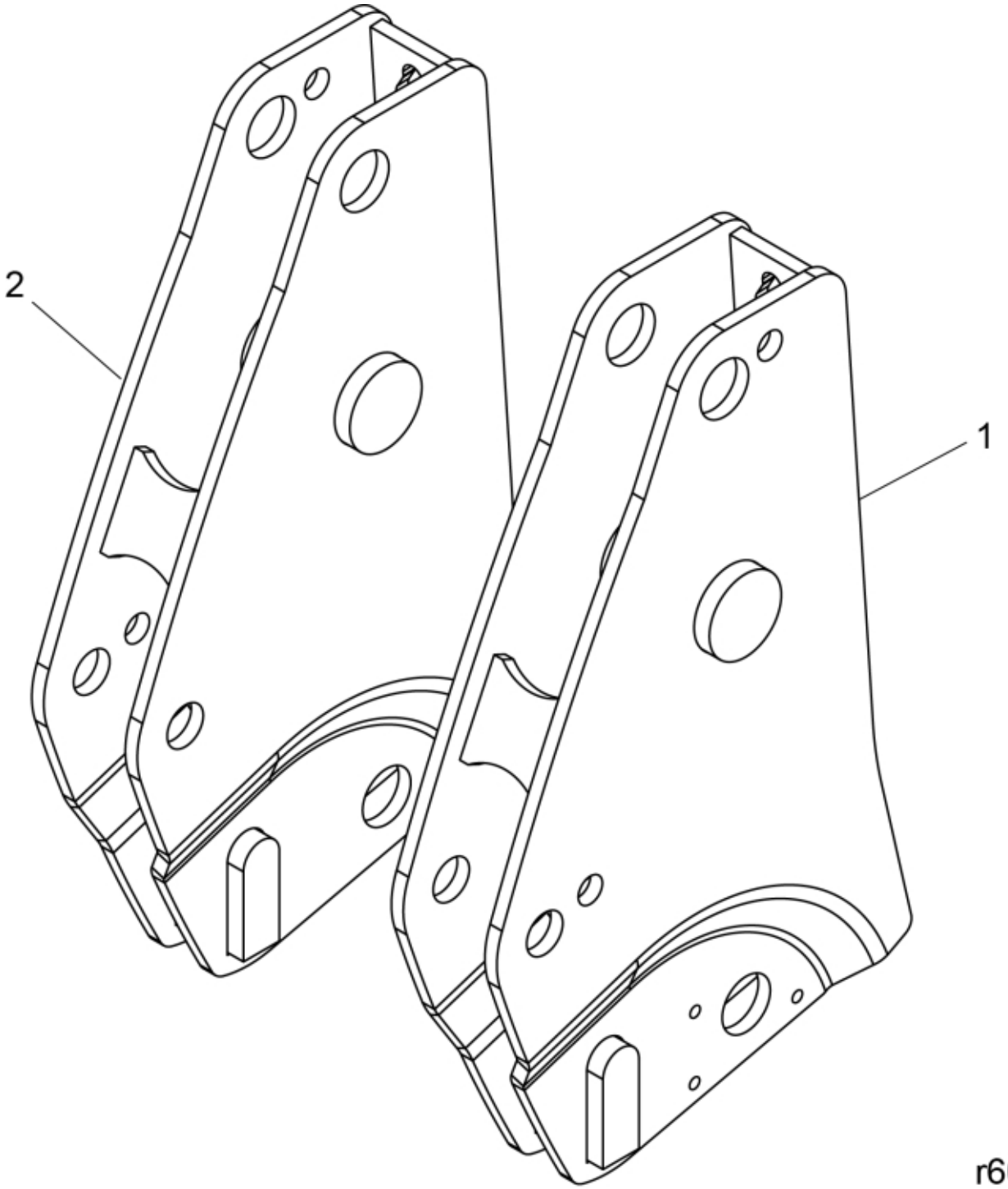

© 2025 Jost

Description	NSL
Part assemblies	Bearing box

PartNo	Pos	Qty	Name	Specifications
60107462-7	1	1	Bearing box LH	Quicke Grey
60107463-7	2	1	Bearing box RH	Quicke Grey

© 2025 Jost