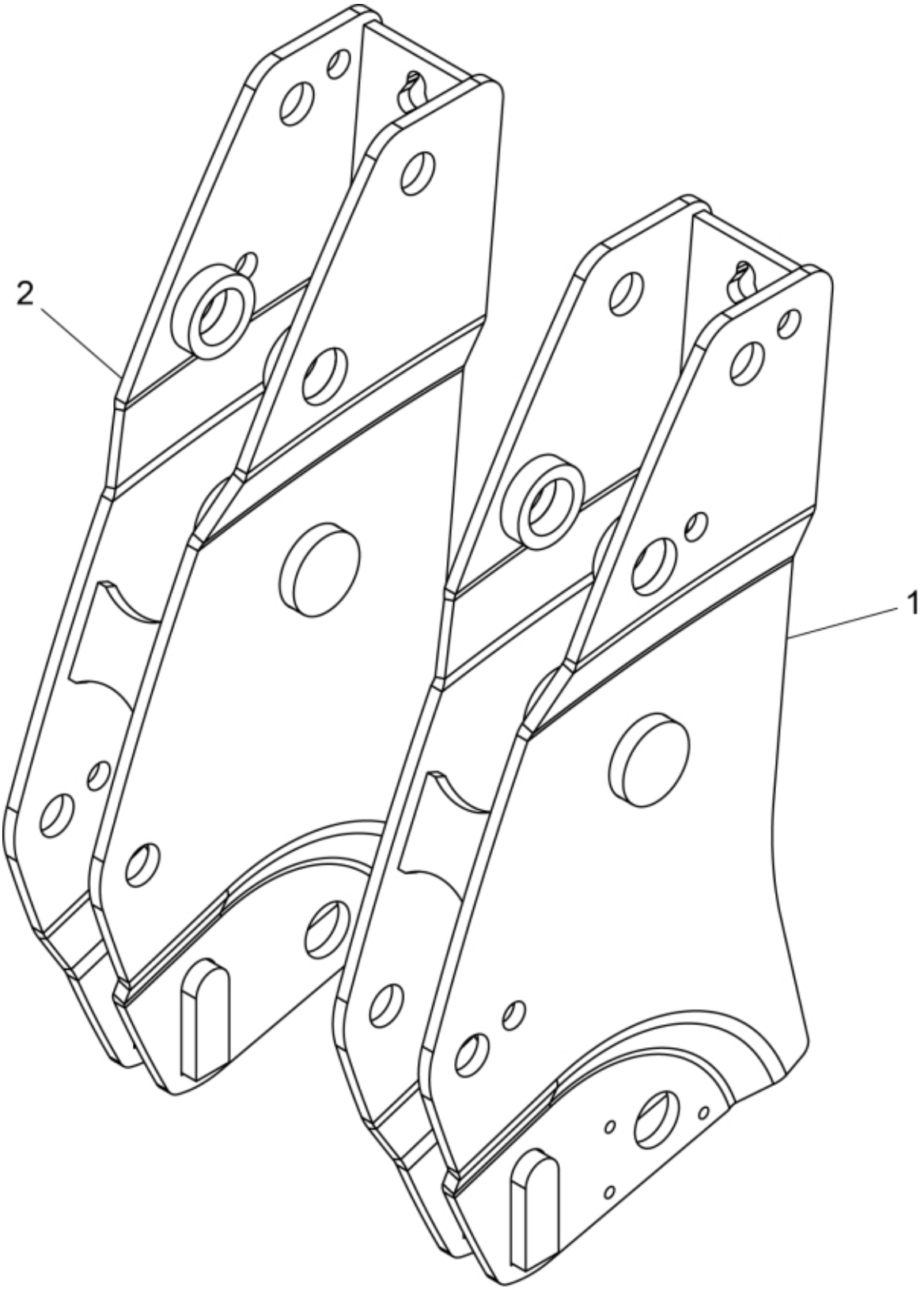

© 2025 Jost

Description	MSL
Part assemblies	Bearing box
Specification	Specification: Quicke Grey

PartNo	Pos	Qty	Name	Specifications
60004468-7	1	1	Bearing box LH	Quicke Grey
60004577-7	2	1	Bearing box RH	Quicke Grey

© 2025 Jost