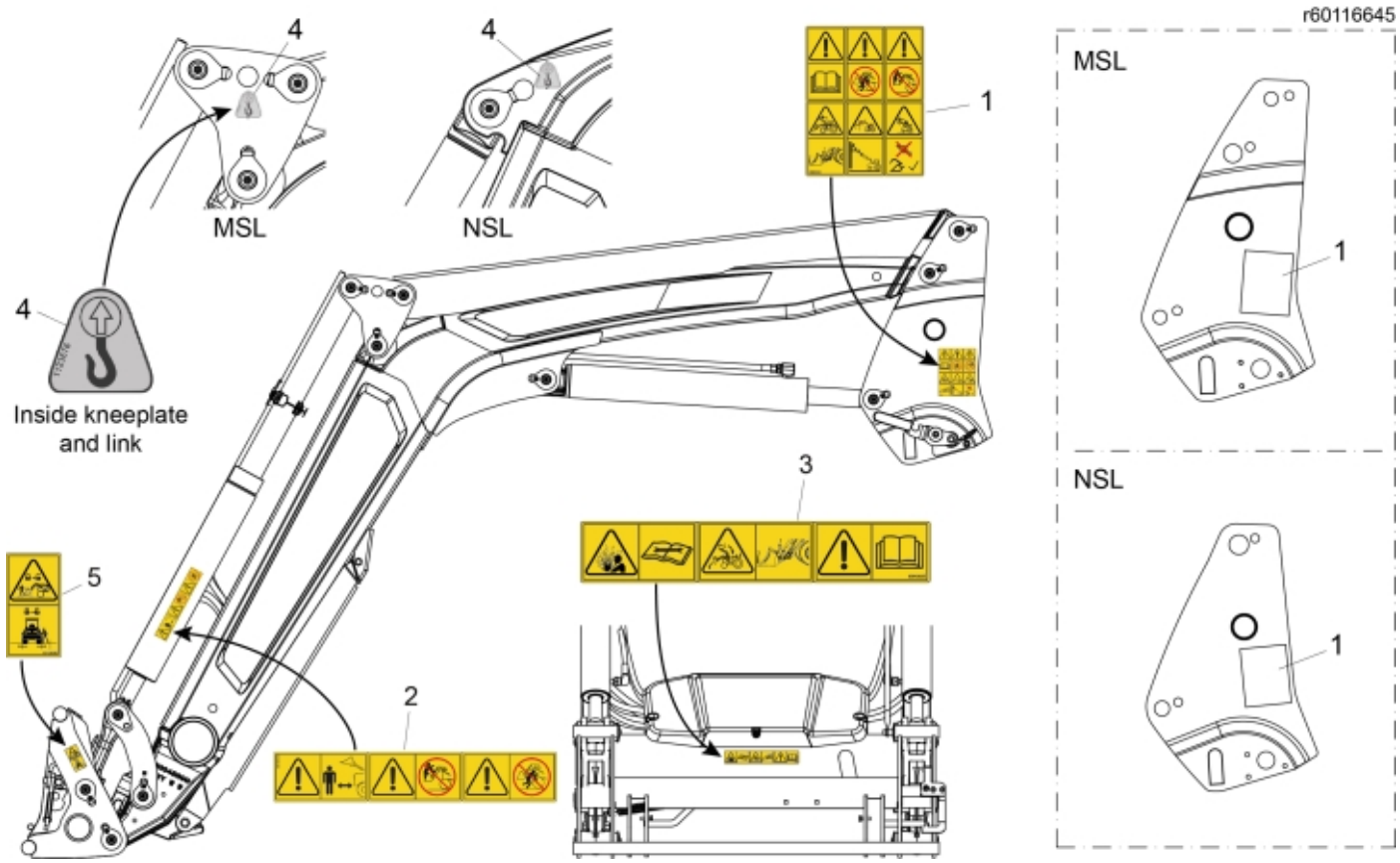
r60116645
4
MSL
4
NSL
1
4
Inside kneeplate
and link
3
5
2
MSL
1
NSL
1

© 2025 Jost

Part assemblies Warning decals

PartNo	Pos	Qty	Name	Specifications
60042633	1	1 PCS	Warning decal	
60120530	2	2	Warning decal	
60042635	3	1 PCS	Warning decal	
1123676	4	2	Decal, lift	
60129985	5	2	Warning decal	

© 2025 Jost