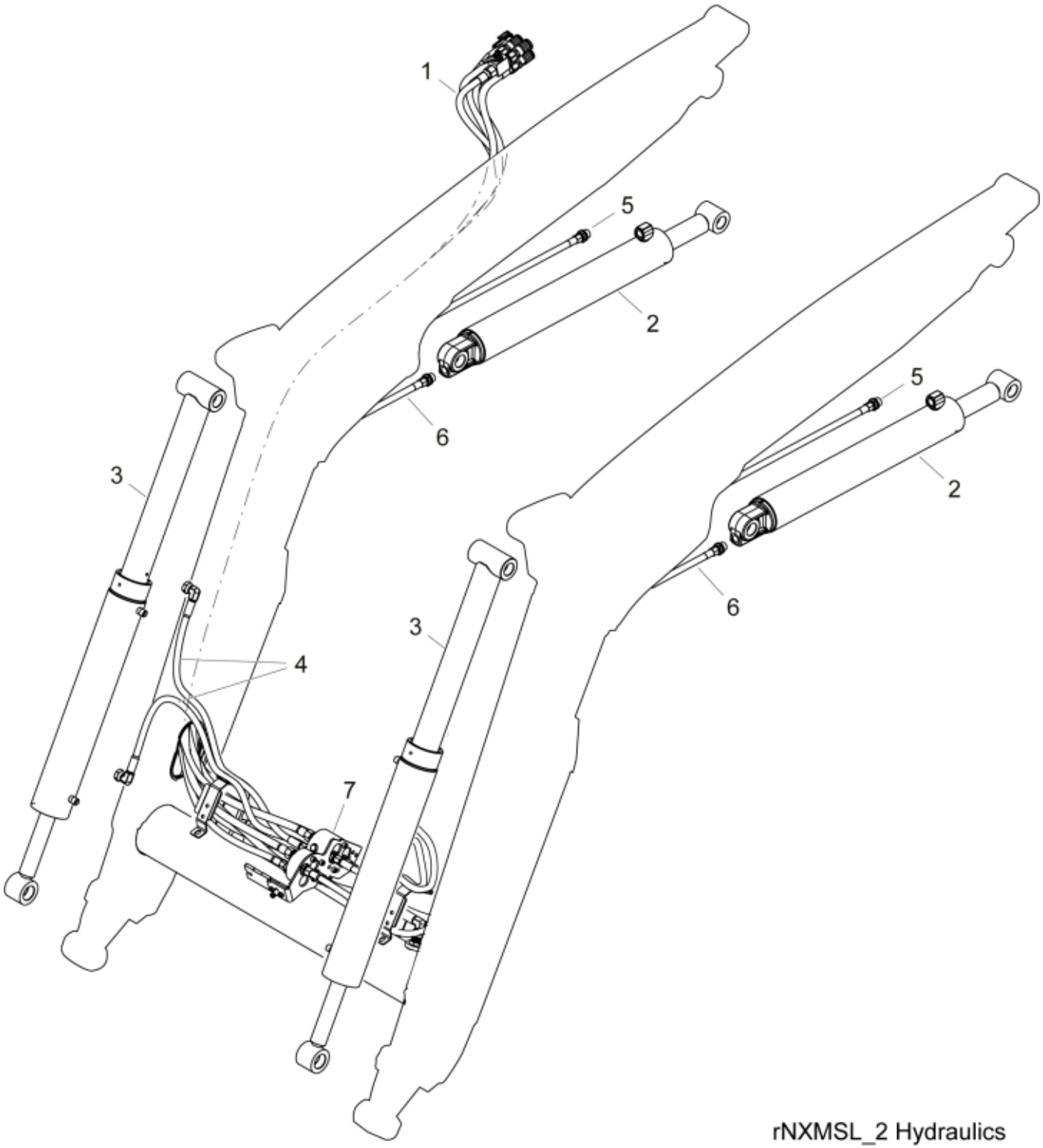

rNXMSL_2 Hydraulics

© 2025 Jost

Part assemblies Hydraulics

Hydraulics:Cylinder hoses

PartNo	Pos	Qty	Name	Specifications
- - -	1	1	Main hose kit	See separate part list
60054997-1	2	2 PCS	Lift Cylinder	Glossy Black
60019004-1	3	2	Tilt Cylinder	Glossy Black
60003017	4	4	Hose	3/8" L=940 3/8GRLMA - 3/8G90LMA
60003879	5	2	Hose	3/8" L=2100 3/8GRLMA - 3/8GRLMA
60006762	6	2	Hose	3/8" L=1460 1/2GRLM - 3/8GRLM
4500233	7	1	CVU Basic	MSL

© 2025 Jost