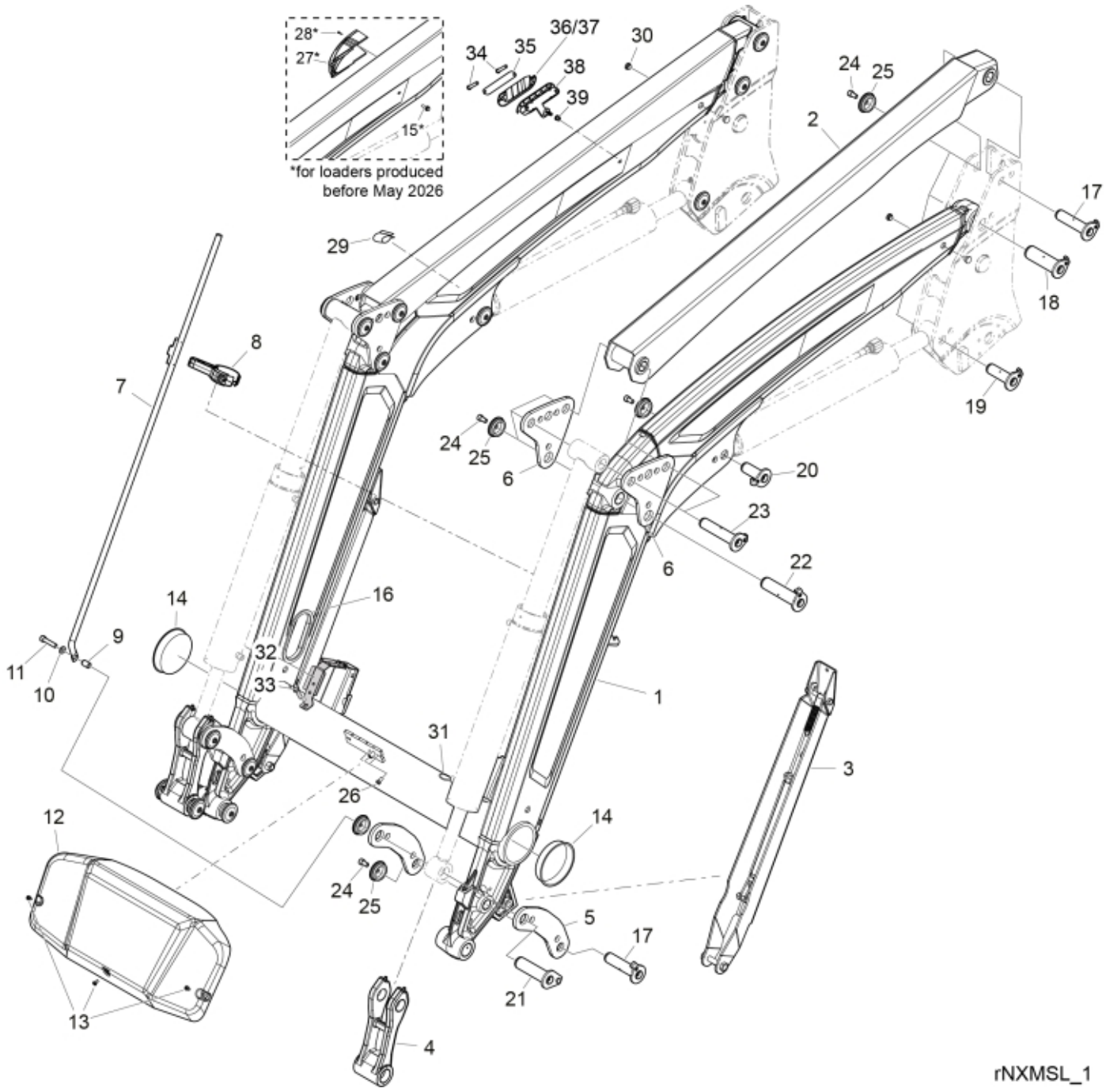
28*
27*
15*
*for loaders produced before May 2026
36/37
34
35
38
39
30
24
25
2
17
18
29
8
7
19
24
25
6
20
23
6
22
14
16
9
11
10
32
33
1
31
3
26
12
14
24
25
5
17
21
13
4
rNXMSL_1

© 2025 Jost

Part assemblies Loader beam

PartNo	Pos	Qty	Name	Specifications
60107822-7	1	1	Loader beam w. bushings	Quicke Grey
60115553-17	2	2	Parallel rod w. bushings	Black Texture
60045911-7	3	2 PCS	Support leg cpl.	Quicke Grey
60018637	4	2	Link w. bushings	Glossy Black
60052804	4*	2	Link w. bushings	Glossy Black *for loaders with Euro/SMS
60062380-7	5	4	Link	Quicke Grey
60103620-7	6	4	Knee link	Quicke Grey
5215217	7	1	Indicator rod	
5215208	8	1	Holder kit	
5215227	9	1	Spacer	
5013110	10	1	Washer	BRB 10.5x22x2
5050605	11	1	Screw	MC6S 10x50 Loc
60115321	12	1	Centre Cover	
5051982	13	3	Screw	M6x8
5053447	14	2	Cover	
5006018	15*	1	Screw	M6SF M8X25 *For loaders produced before May 2026
60009870	16	2	Edge cover	16 mm
60018046	17	4	Pivot Pin	D=30, L=127mm
60018062	18	2	Pivot Pin	D=40, L=127mm
60018047	19	2	Pivot Pin	D=30, L=96mm
60004177	20	2	Pivot Pin	D=30, L=80mm
60003247	21	2	Pivot Pin	D=35, L=127mm
60000355	22	2	Pivot Pin	D=35, L=147mm
60033598	23	4	Pivot Pin	D=30, L=147mm
5050608	24	21	Screw	MC6S M10x20 Loc
5215131	25	22	Locking cover	
5002058	26	2	Screw	M6S 8x16
60019418	27*	1	Cover	Std *For loaders produced before May 2026
5050442	28*	1	• Screw	STS T40x12 *For loaders produced before May 2026
60011125	29	2	Cover	
60021154	30	8	Plug	
60008713	31	2	Edge cover	
60070968	32	2	Hose guide	
5002077	33	2	Screw	M6S 10x30
5053656	34	2	Screw	M8x60
60117642	35	1	Clamp plate	
60117558	36	1	Hose clamp	Upper part
60117559	37	1	Hose clamp L3	Upper part
60129942	38	1	Hose clamp	Lower part
5011921	39	1	Nut	M6MF M8

© 2025 Jost