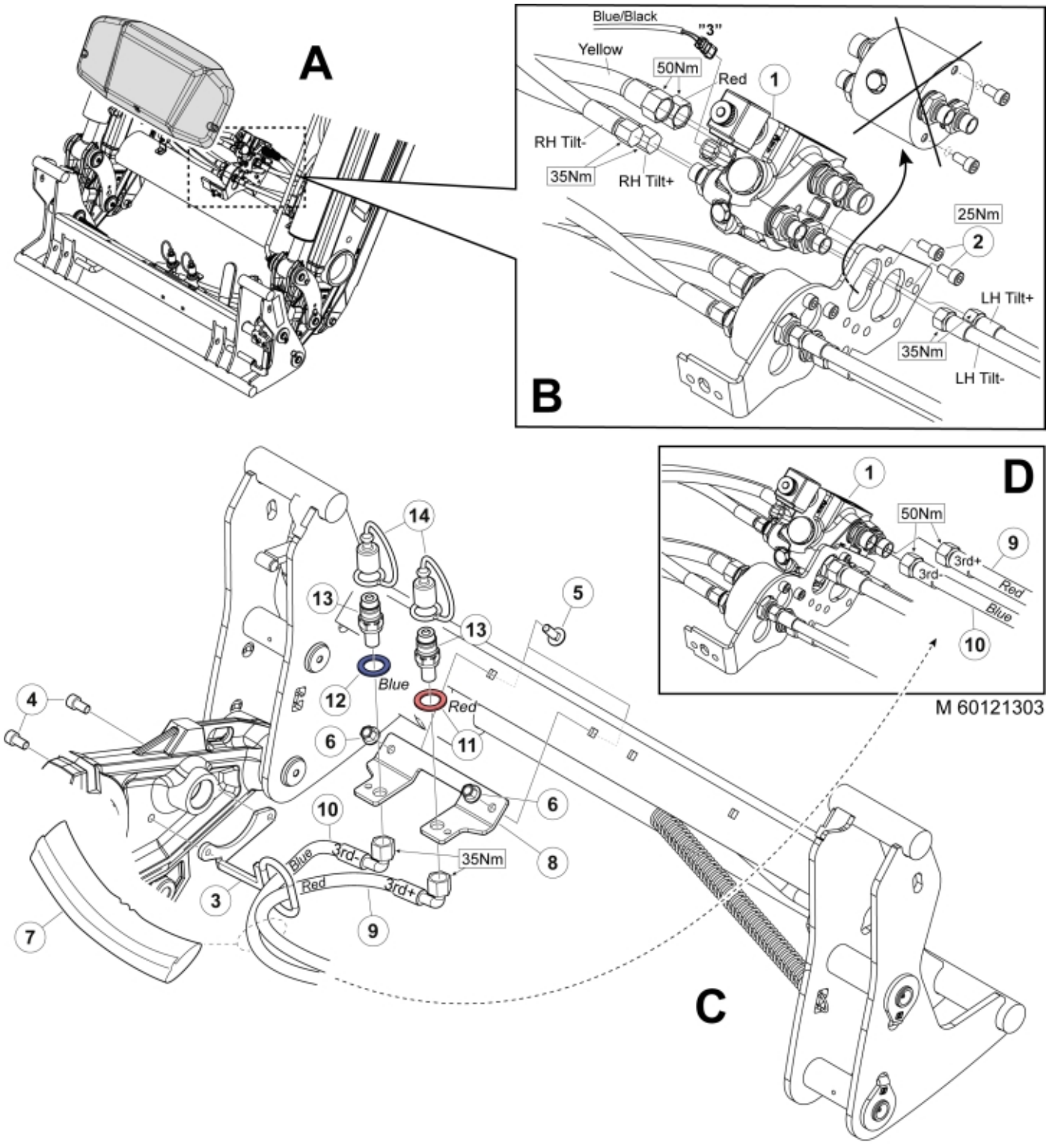
A
B
Blue/Black
"3"
Yellow
50Nm
Red
1
RH Tilt-
35Nm
RH Tilt+
25Nm
2
LH Tilt+
35Nm
LH Tilt-
C
D
1
50Nm
9
3rd+
3rd-
Red
Blue
10
M 60121303
14
13
13
5
4
12
Blue
Red
6
11
6
10
8
Blue
3rd-
35Nm
Red
3rd+
3
9
7

© 2025 Jost

Description	Euro
Part assemblies	3rd service, ISO-A Euro

PartNo	Pos	Qty	Name	Specifications
4501092	1	1	Block cpl	3rd service, Replaces 4500105, 3/1/2019 12:00:00 AM
5004919	2	2	Screw	MC6S M8x16
60032284	3	1	Hose guide	
5050608	4	2	Screw	MC6S M10x20 Loc
5006002	5	2	Screw	MVBF 10x30
5011554	6	2	Nut	Loc-King M10
60019369	7	1	Hose cover	
60018857	8	1	Bracket	
60014066	9	1	Hose	3/8" L=1260 1/2GRLMA - 3/8G90LMA
60014451	10	1	Hose	3/8" L=1170 1/2GRLMA - 3/8G90LMA
5022157	11	1	Washer, red	
5022159	12	1	Washer, blue	
5044940	13	2	Coupling	ISO-A 1/2" Male - G3/8
5044129	14	2	Dust Cover	1/2" Male

© 2025 Jost