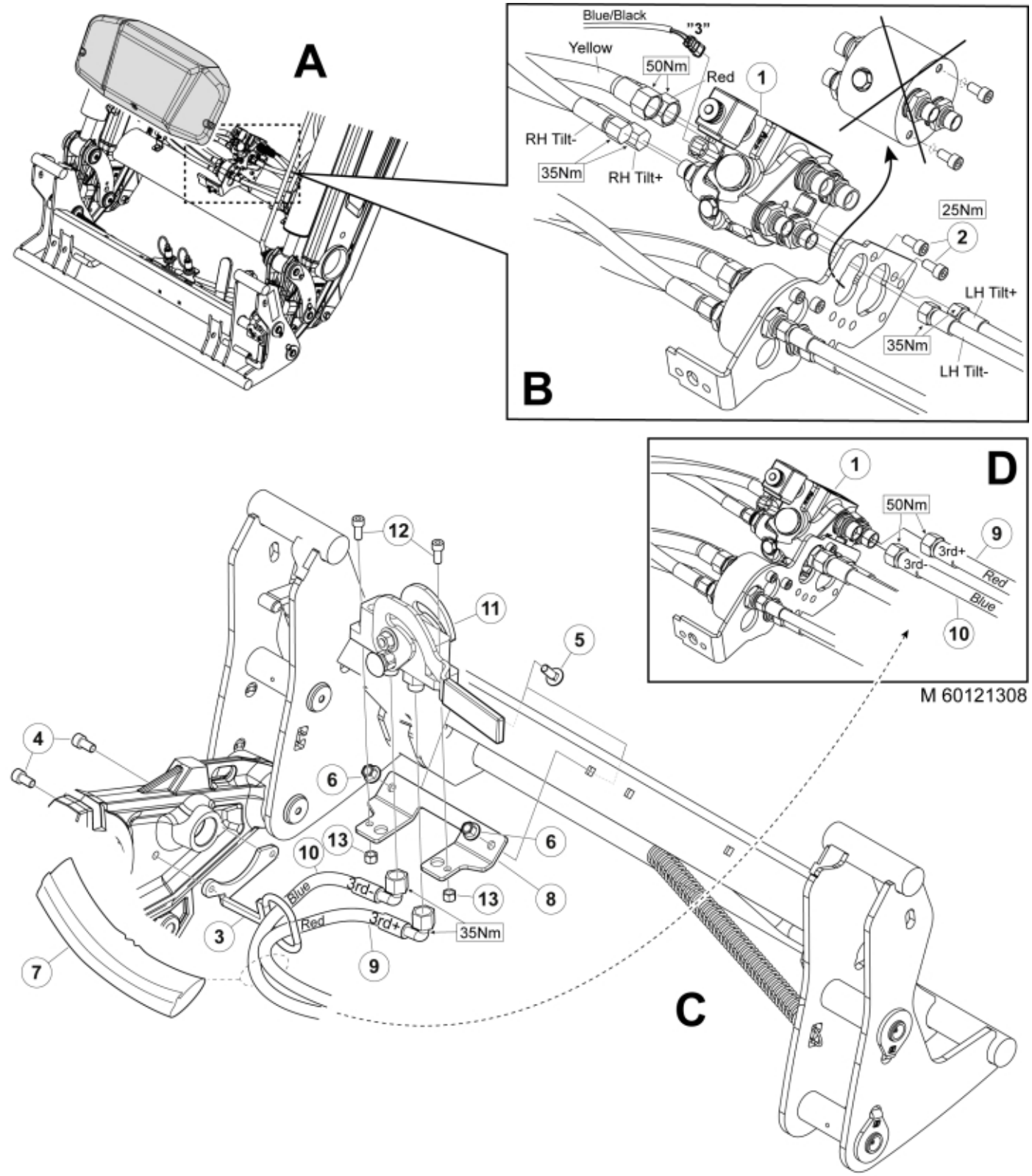
A
B
Blue/Black
"3"
Yellow
50Nm
Red
1
RH Tilt-
35Nm
RH Tilt+
25Nm
2
LH Tilt+
35Nm
LH Tilt-
D
1
50Nm
9
3rd+
3rd-
Red
Blue
10
M 60121308
12
11
5
4
6
10
13
6
Blue
3rd-
13
8
Red
3rd+
35Nm
3
9
7
C

© 2025 Jost

Description	Euro
Part assemblies	3rd service, SelectoFix Euro

PartNo	Pos	Qty	Name	Specifications
4501092	1	1	Block cpl	3rd service, Replaces 4500105, 3/1/2019 12:00:00 AM
5004919	2	2	Screw	MC6S M8x16
60032284	3	1	Hose guide	
5050608	4	2	Screw	MC6S M10x20 Loc
5006002	5	2	Screw	MVBF 10x30
5011554	6	2	Nut	Loc-King M10
60019369	7	1	Hose cover	
60018857	8	1	Bracket	
60014066	9	1	Hose	3/8" L=1260 1/2GRLMA - 3/8G90LMA
60014451	10	1	Hose	3/8" L=1170 1/2GRLMA - 3/8G90LMA
10550369	11	1	Selecto Fix, Lower part	
5004061	12	2	Screw	MC6S M8x20
5011553	13	2	Nut	M6M M8 Loc-king

© 2025 Jost