

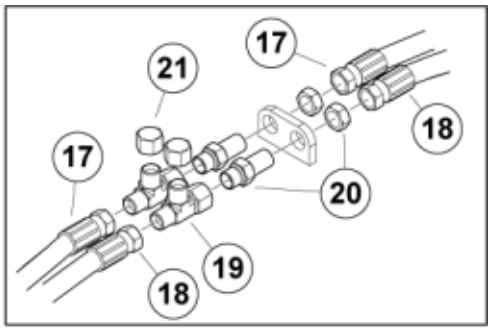

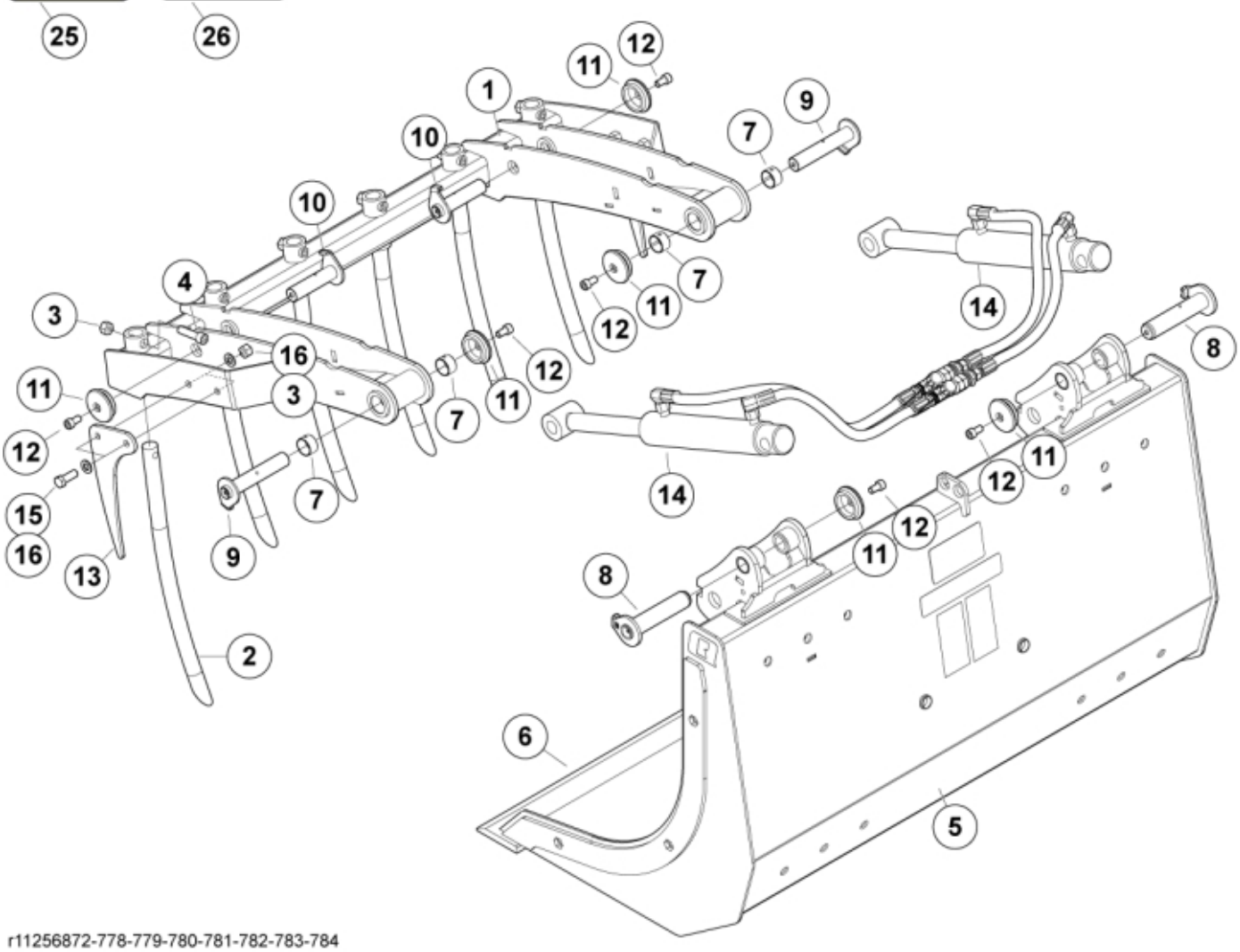

r11256872-778-779-780-781-782-783-784

© 2025 Jost

Part assemblies Multibenne S+ 90

PartNo	Pos	Qty	Name	Specifications
60118918-17	1	1	Upper part, without tines	
60106817-17	2	4	Tine	
5011555	3	8	Nut	M12 Loc
5004101	4	4 PCS	Screw	MC6S M12 x 50
60118911-17	5	1	Bucket	
60118916	6	1	• Cutting edge	
5018515	7	4	Bushing	D30 L=20
60108736	8	2	Pin	
60019853	9	2	Pin	D=30 L=141 (replaces 5220060)
60110076	10	2	Pin	
5215131	11	6	Locking cover	
5050608	12	6	Screw	MC6S M10x20 Loc
60108327-22	13	2	Side tine	
60111197-1	14	1	Cylinder	Glossy Black
5002103	15	4	Screw	M12 x 35
5013104	16	8	Washer	13.5 x 24 x 2
60112495	17	2	Hose	3/8" L=715 1/2GRLM 3/8G90LMC
60112494	18	2	Hose	3/8" L=500 1/2GRLM 3/8G90LMC
5028031	19	2	T-Adapter	
11120580	20	2	Adapter cpl.	
5028311	21	2	Plug	
60051752	22	1 PCS	Decal	Multibenne S+
60056626	23	2	Decal	
60071733	24	1	Decal	"Max 210 bar"
1123674	25	1	Warning decal	"Read manual"
1123673	26	1	Warning decal	

© 2025 Jost