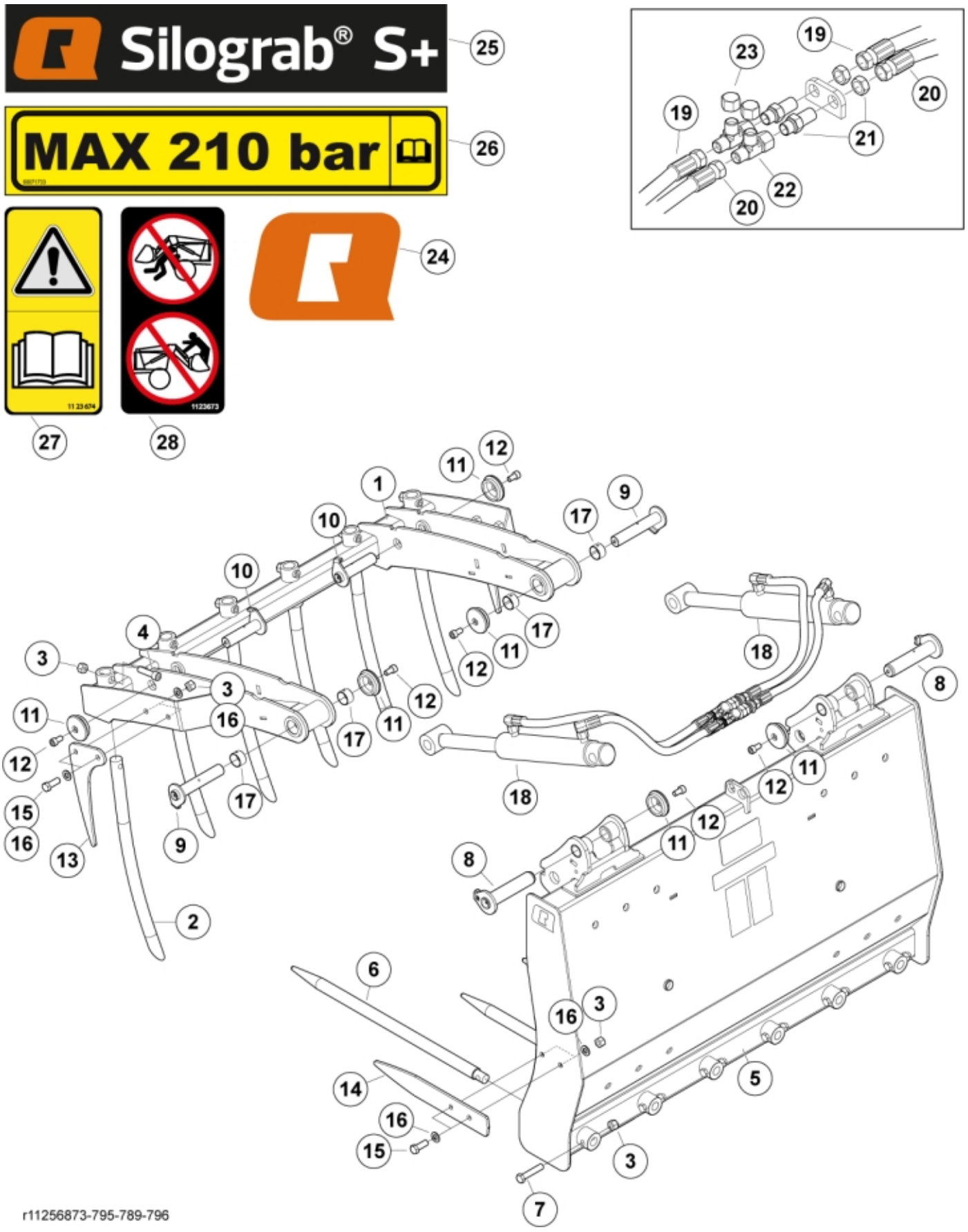
Silograb® S+
MAX 210 bar
11 23 674
1123673
r11256873-795-789-796

© 2025 Jost

Part assemblies	Silograb S+ 90
Specification	Year From: 12/11/2025 12:00:00 AM

PartNo	Pos	Qty	Name	Specifications
60118918-17	1	1	Upper part, without tines	
60106817-17	2	4	Tine	
5011555	3	16	Nut	M12 Loc
5004101	4	4 PCS	Screw	MC6S M12 x 50
60118924-17	5	1	Frame, without tines	
60110038-17	6	4	Tine	
60108736	8	2	Pin	
5002109	7	4	Screw	M6S M12 x65 (8.8)
60019853	9	2	Pin	D=30 L=141 (replaces 5220060)
60110076	10	2	Pin	
5215131	11	6	Locking cover	
5050608	12	6	Screw	MC6S M10x20 Loc
60108327-22	13	2	Side tine	
60111391-22	14	2	Side tine	
5002103	15	8	Screw	M12 x 35
5013104	16	16	Washer	13.5 x 24 x 2
5018515	17	4	Bushing	D30 L=20
60111197-1	18	1	Cylinder	Glossy Black
60112495	19	2	Hose	3/8" L=715 1/2GRLM 3/8G90LMC
60112494	20	2	Hose	3/8" L=500 1/2GRLM 3/8G90LMC
11120580	21	2	Adapter cpl.	
5028031	22	2	T-Adapter	
5028311	23	2	Plug	
60056626	24	2	Decal	
60051753	25	1	Decal	Silograb S+
60071733	26	1	Decal	"Max 210 bar"
1123674	27	1	Warning decal	"Read manual"
1123673	28	1	Warning decal	

© 2025 Jost