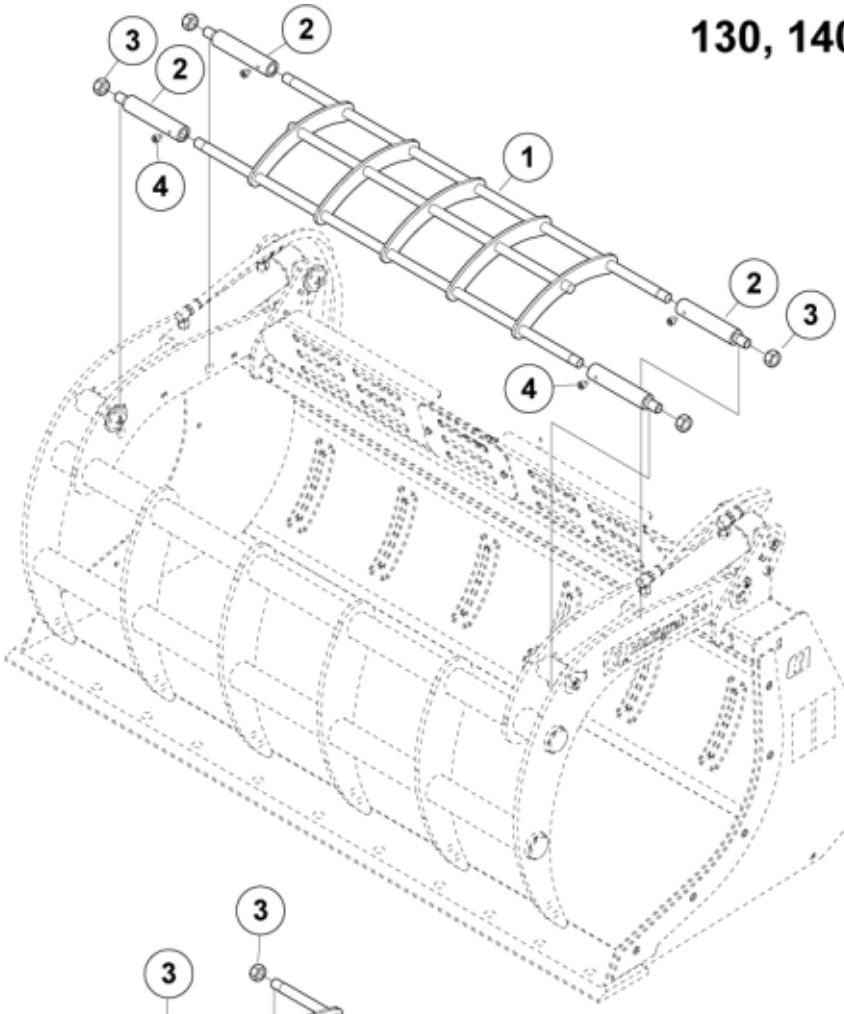

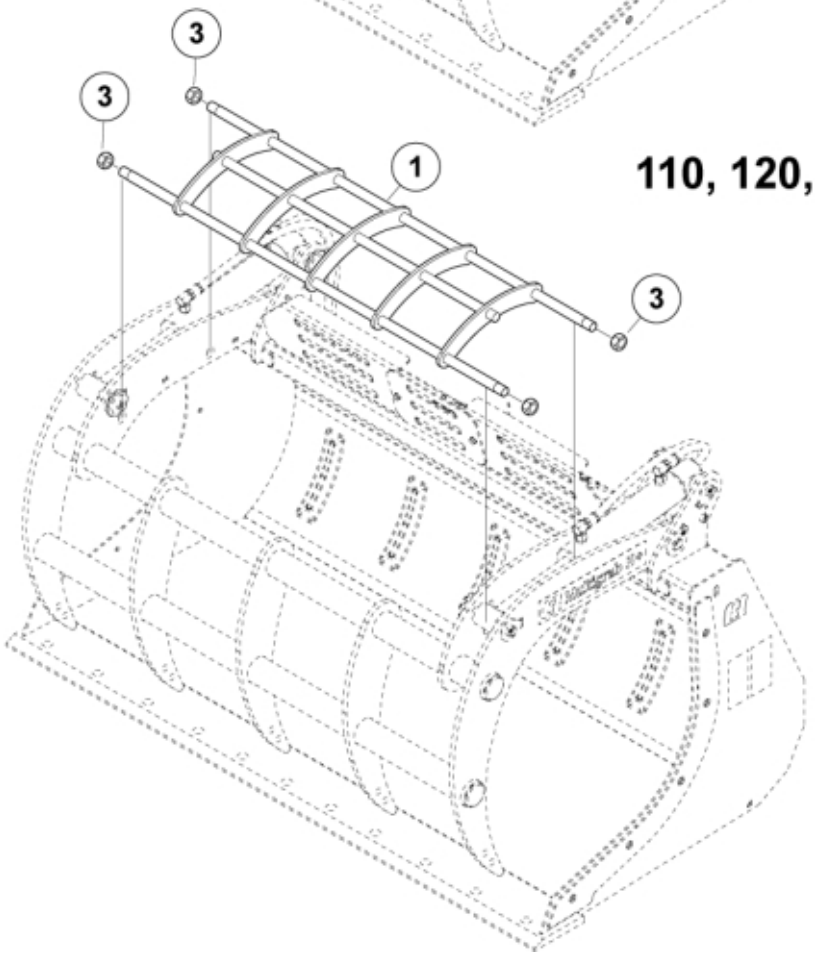

M 11256933-934

© 2025 Jost

Description	110-140
Part assemblies	Top Guard

PartNo	Pos	Qty	Name	Specifications
	1	1	Top Guard	
	2	4	Socket	
	3	4 PCS	Nut	M6M M20
	4	4	Screw	MC6S M8X10 (12.9)

© 2025 Jost