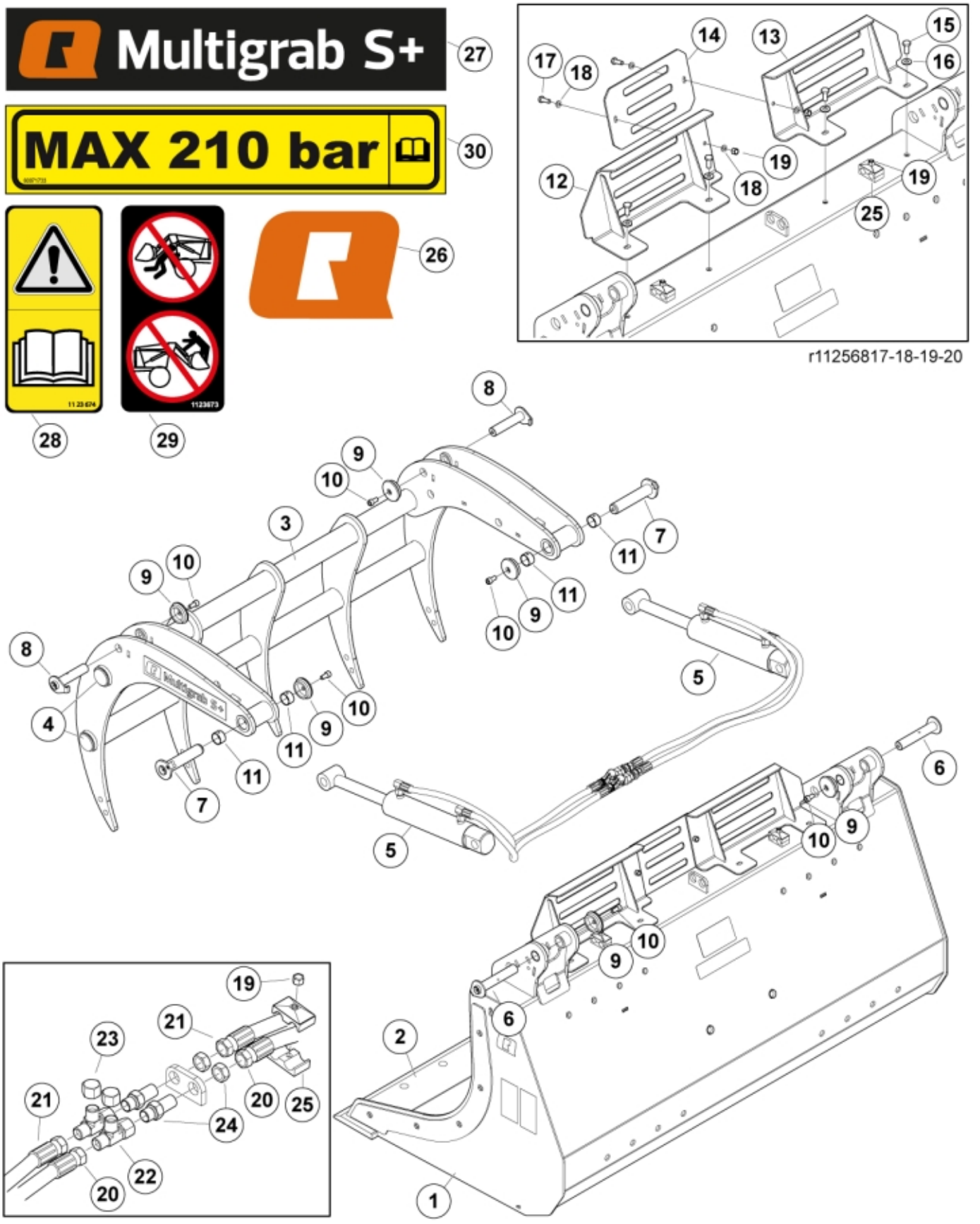

© 2025 Jost

Part assemblies Multigrab S+ 180

PartNo	Pos	Qty	Name	Specifications
60121258-17	1	1	Bucket	
60041660	2	1 PCS	Cutting edge	
60115984-17	3	1	Jaw	
60098231	4	4	Plastic cover	
60110582-1	5	1	Cylinder	Glossy Black, 12/10/2025 12:00:00 AM
60108736	6	2	Pin	
60019853	7	2	Pin	D=30 L=141 (replaces 5220060)
60112328	8	2	Pin	
5215131	9	6	Locking cover	
5050608	10	6	Screw	MC6S M10x20 Loc
5018515	11	4	Bushing	D30 L=20
60120658-17	12	1	Spillguard LH	
60120643-17	13	1	Spillguard RH	
60120954-22	14	1	Plate	
5002089	15	4	Screw	M6S 10 x 25
5013110	16	4	Washer	BRB 10.5x22x2
5002052	17	2	Screw	M6S M8x25
5013101	18	4	Washer	BRB 8,4 x 16
5011553	19	2	Nut	M6M M8 Loc-king
60119463	20	2	Hose	3/8" L=930 3/8G90LMC 1/2GRLM
60057100	21	2 PCS	Hose	3/8" L=1150 1/2GRLM 3/8G90LMC
5028031	22	2	T-Adapter	
5028311	23	2	Plug	
11120580	24	2	Adapter cpl.	
5016968	25	2	Hose clamp	
60056626	26	2	Decal	
60112975	27	2	Decal	Multigrab S+
1123674	28	1	Warning decal	"Read manual"
1123673	29	1	Warning decal	
60071733	30	1	Decal	"Max 210 bar"

© 2025 Jost