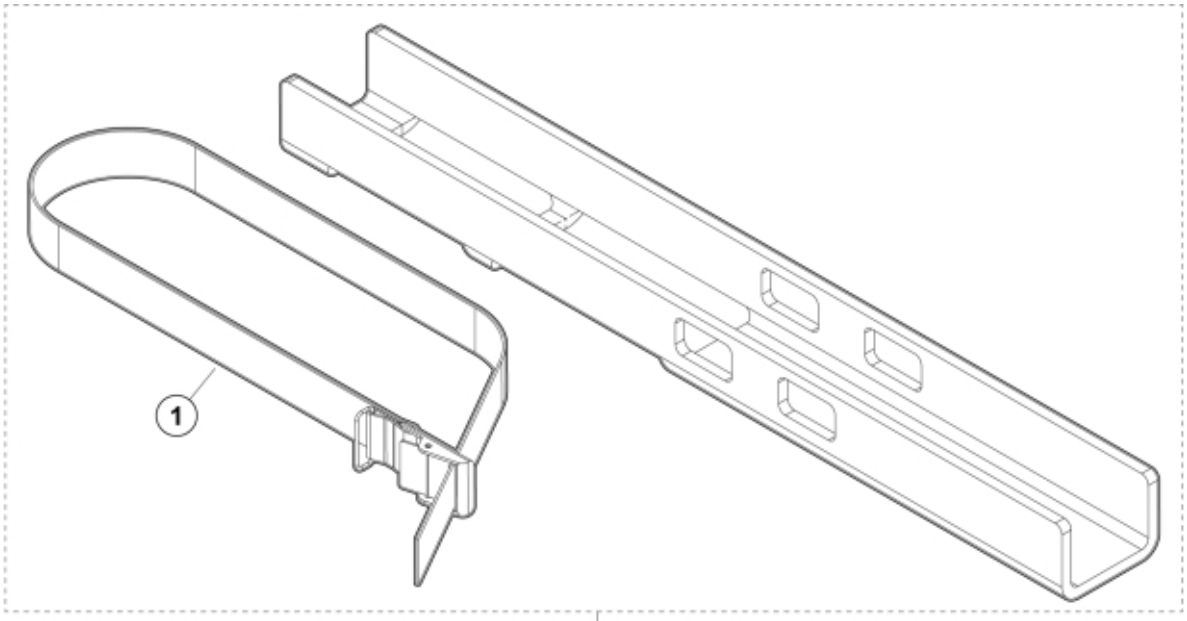

60044303
Cylinder stop kit

© 2025 Jost

Part assemblies	Cylinder stop kit

PartNo	Pos	Qty	Name	Specifications
5022145	1	1	Tie-down strap	

© 2025 Jost