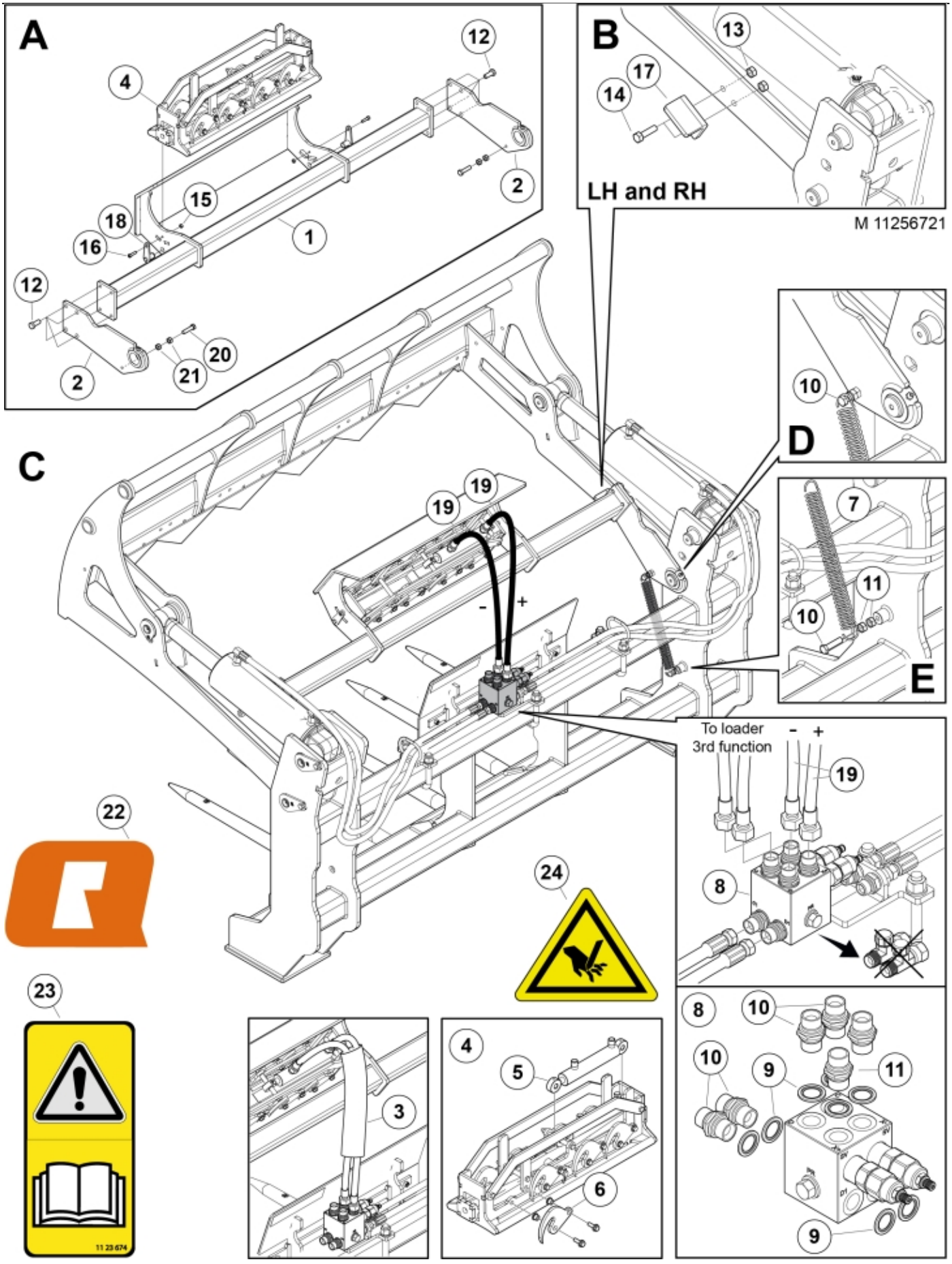

© 2025 Jost

Part assemblies	Bale wrap handler
Specification	Year To: 3/1/2026 12:00:00 AM

PartNo	Pos	Qty	Name	Specifications
60120627-17	1	1	Beam	
60130021-17	2	1	Bracket	
60087000	3	1	Hose cover	
60120588	4	1	Hook assembly	
60064901	5	1	• Cylinder	25/16
60120266	6	8	• Hook	
60120877	7	2	Spring	
60069226	8	1 PCS	Sequence valve	
5013853	9	8	• Dowty washer	Tredo 1/2", Part is included in kit 60007907 Hose cpl., 9032177 Hose cpl.
1120012	10	5	• Adaptor	G 1/2"
5052185	11	1	• Adaptor	R1/2" - R1/2" Ø1
	12	8	Screw	M6S M12X30
	13	4	Nut	M12 Loc
	14	4	Screw	M6S M12X40 (8.8)
	15	2	Locking nut	M6 Locking
	16	2 PCS	Screw	MC6S M6x25
60102167	17	2	Bracket	
60120458	18	2	Pivot Pin	
60130492	19	2	Hose	3/8" L=910 1/2GRLM 3/8G45LM
	20	4	Screw	M6S 10x40 (8.8)
	21	8	Nut	M6M M10
60056616	22	1	Decal	"Q" medium 110mm
11136516	23	1	Warning decal	
1123674	24	1	Warning decal	"Read manual"

© 2025 Jost