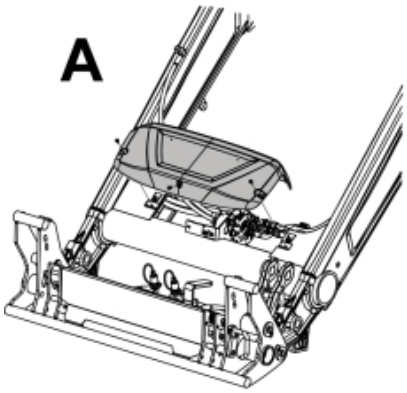

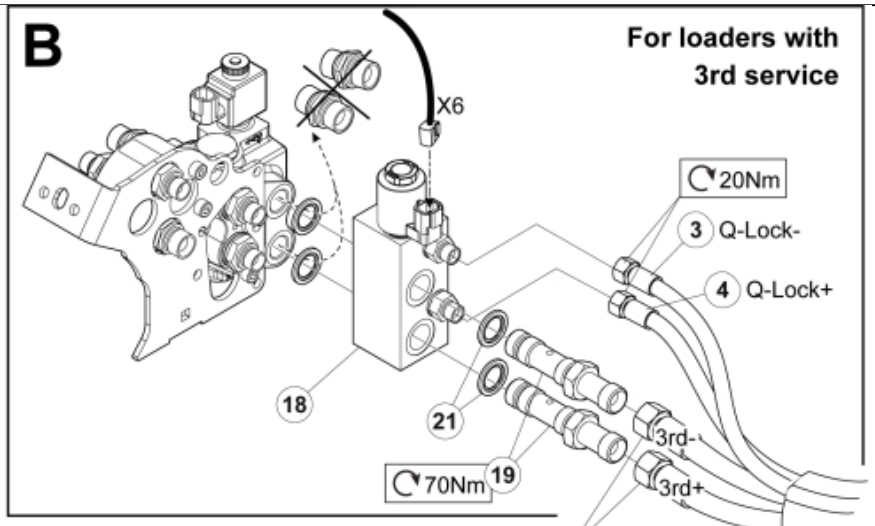

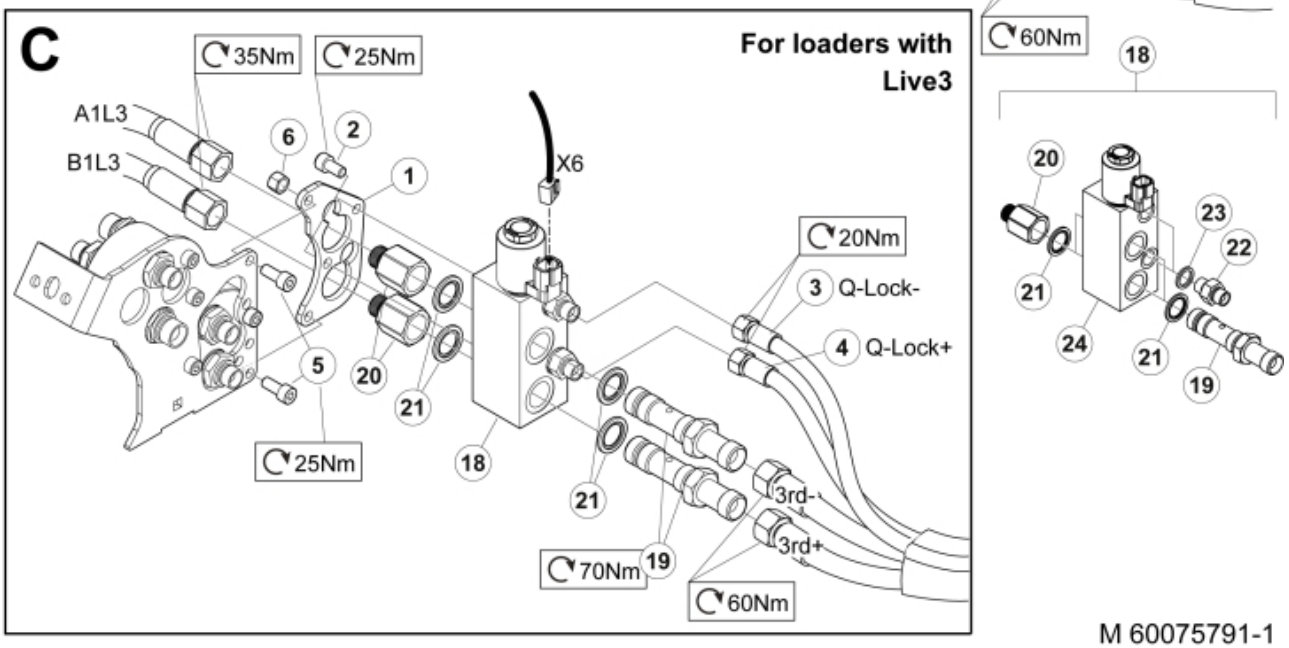

M 60075791-1

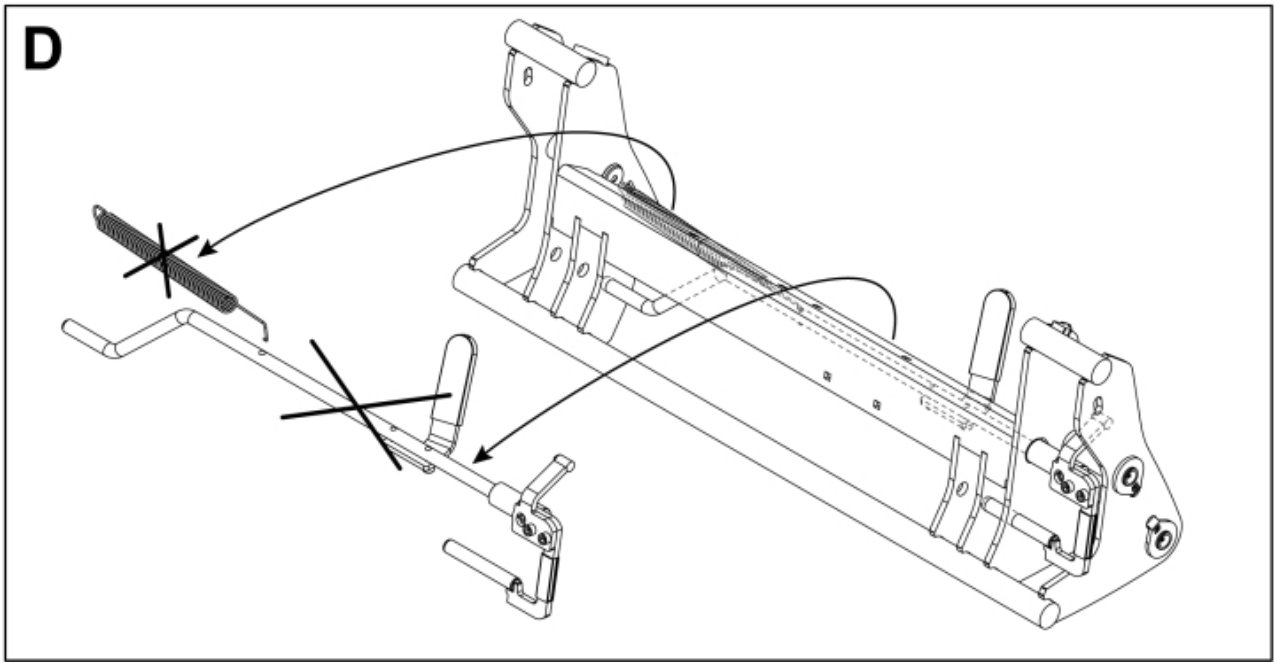

© 2025 Jost

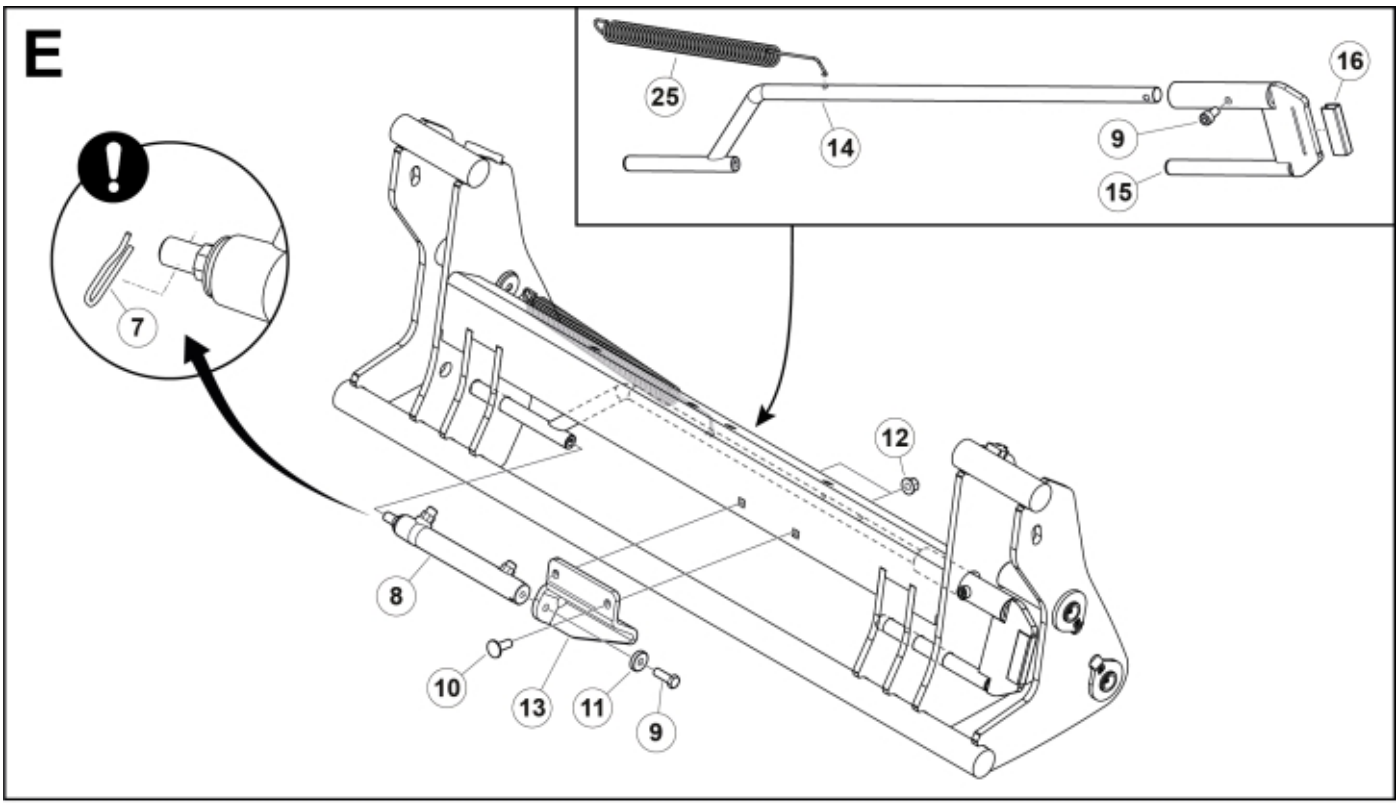

M 60075791-2

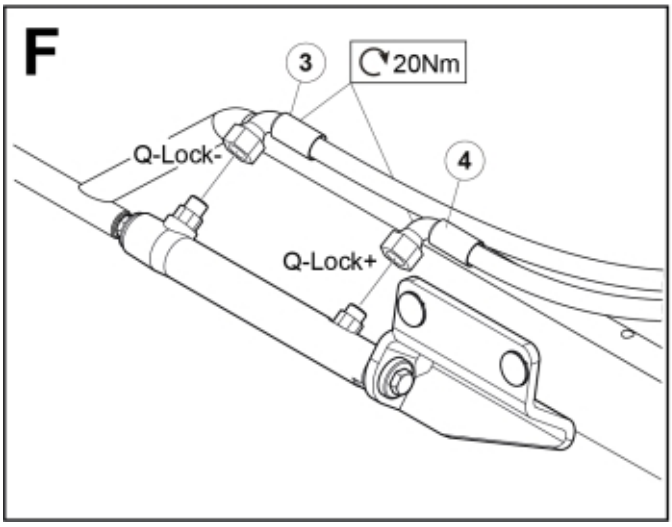

© 2025 Jost

Part assemblies Q-Lock Euro DM

PartNo	Pos	Qty	Name	Specifications
60037972	1	1	Bracket	
5050342	2	2	Screw	MC6S M8x14 (8.8)
60009523	3	1	Hose	1/4" L=1430 1/4G90LM - 1/4GRLM
60009522	4	1	Hose	1/4" L=1280 1/4G90LM - 1/4GRLM
5004061	5	2	Screw	MC6S M8x20
5011553	6	2	Nut	M6M M8 Loc-king
60020459	7	1	Locking Pin	
60103722	8	1	Cylinder	
5002971	9	2	Screw	M6S 10x30 Drilock
5006002	10	2	Screw	MVBF 10x30
5013177	11	1	Washer	TBRSB 10.5x28x6
5052123	12	2	Nut	M6MF M10 LOC 8.8
60073789	13	1	Attachment	
60073879	14	1	Locking mechanism	
60124969	15	1	Handle	
60039148	16	1	Plastic handle	
60019369	17	1	Hose cover	
4501107	18	1	Block cpl	Hydr. Lock, Replaces 4500151, 2/1/2019 12:00:00 AM
60034110	19	2	• Hollow screw	G1/2" Banjo
60104391	20	2	• Adaptor	G1/2" - G3/8"
5013853	21	4	• Dowty washer	Tredo 1/2", Part is included in kit 60007907 Hose cpl., 9032177 Hose cpl.
1120122	22	2	• Adaptor	R 1/4"K - R 1/4"K
5013856	23	2	• Dowty washer	Tredo 1/4"
60037622	24	1	• Valve assy.	Hydraulic lock
60010817	25	1	Spring	

© 2025 Jost