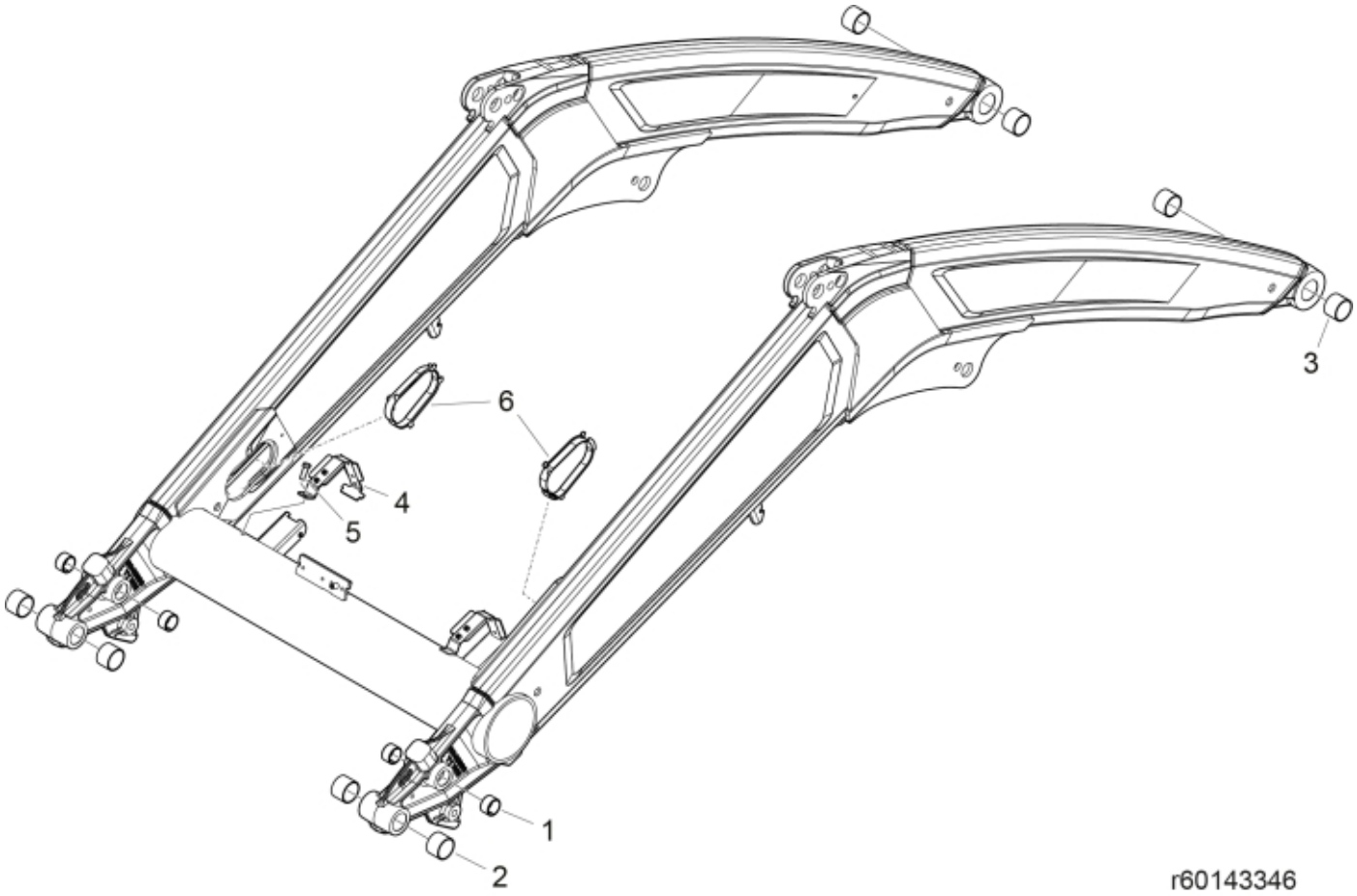

© 2025 Jost

Part assemblies	Loader beam w. bushings
Specification	Specification: Quicke Grey

PartNo	Pos	Qty	Name	Specifications
5018514	1	4	Bushing	D35 L=20
5018904	2	4	Bushing	D40 L=30
60004007	3	4	Bushing	D45 L=30
60070968	4	2	Hose guide	
5002077	5	2	Screw	M6S 10x30
60120968	6	2	Edge cover	19,5 mm

© 2025 Jost