Alt. 1

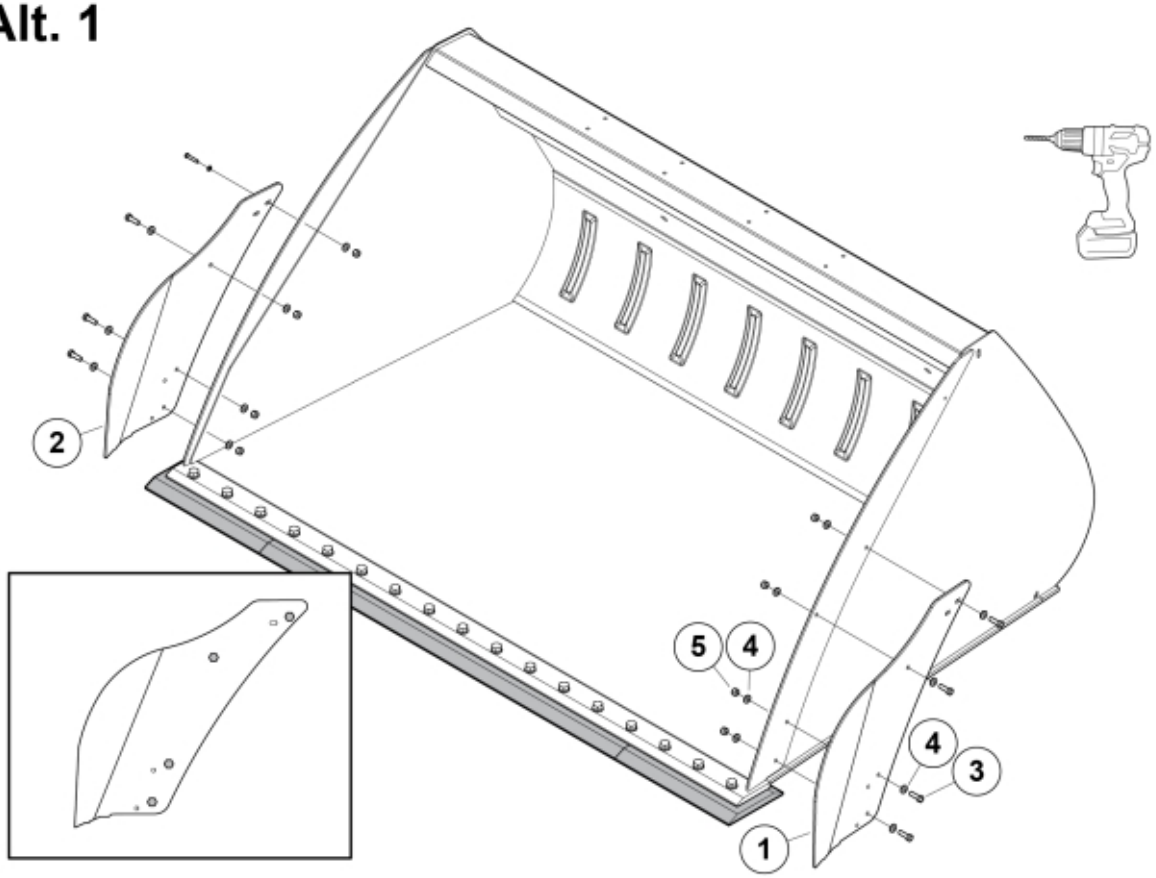

Alt. 2

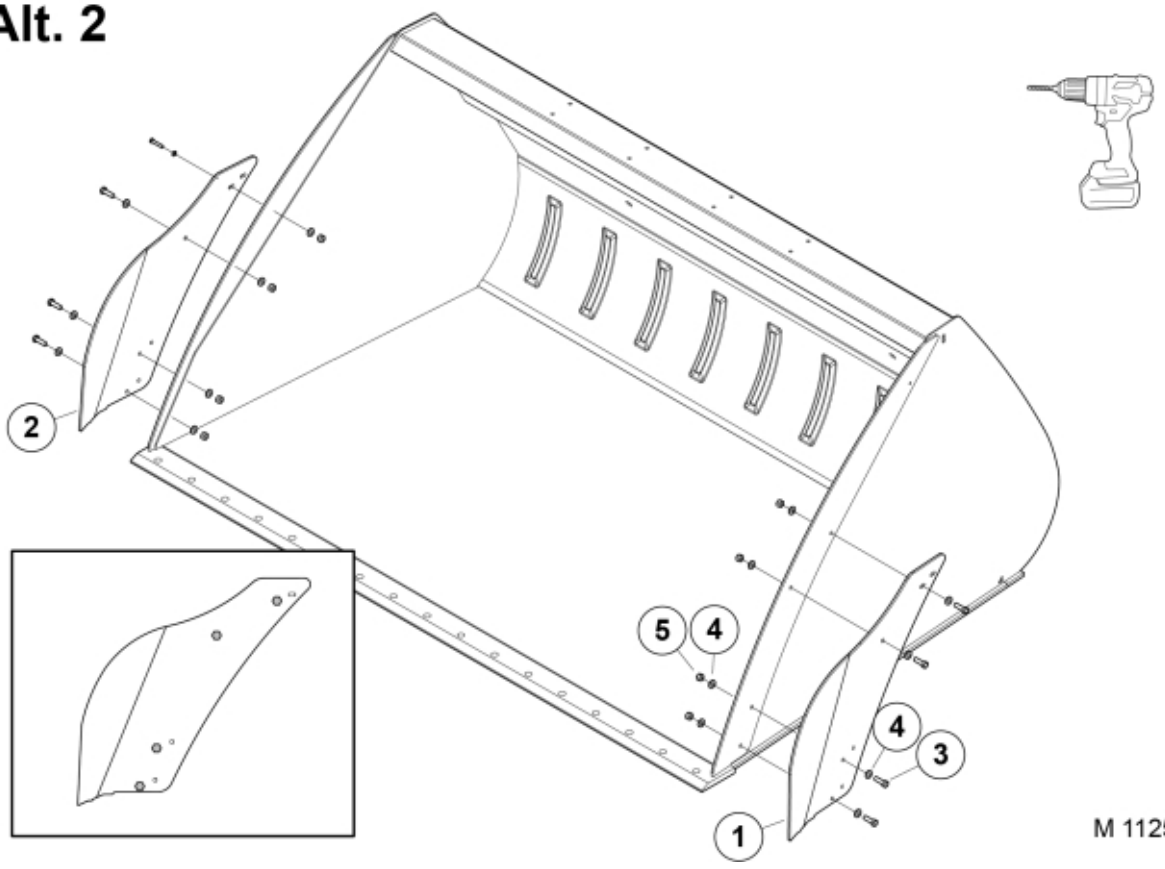

M 11257000

© 2025 Jost

Part assemblies	Bolt on Gable

PartNo	Pos	Qty	Name	Specifications
	1	1	Gable RH	
	2	1	Gable LH	
	3	8	Screw	M6S M12X40 (8.8)
	4	16	Washer	BRB - 13x27x2 350HV
	5	8	Nut	M12 Loc

© 2025 Jost