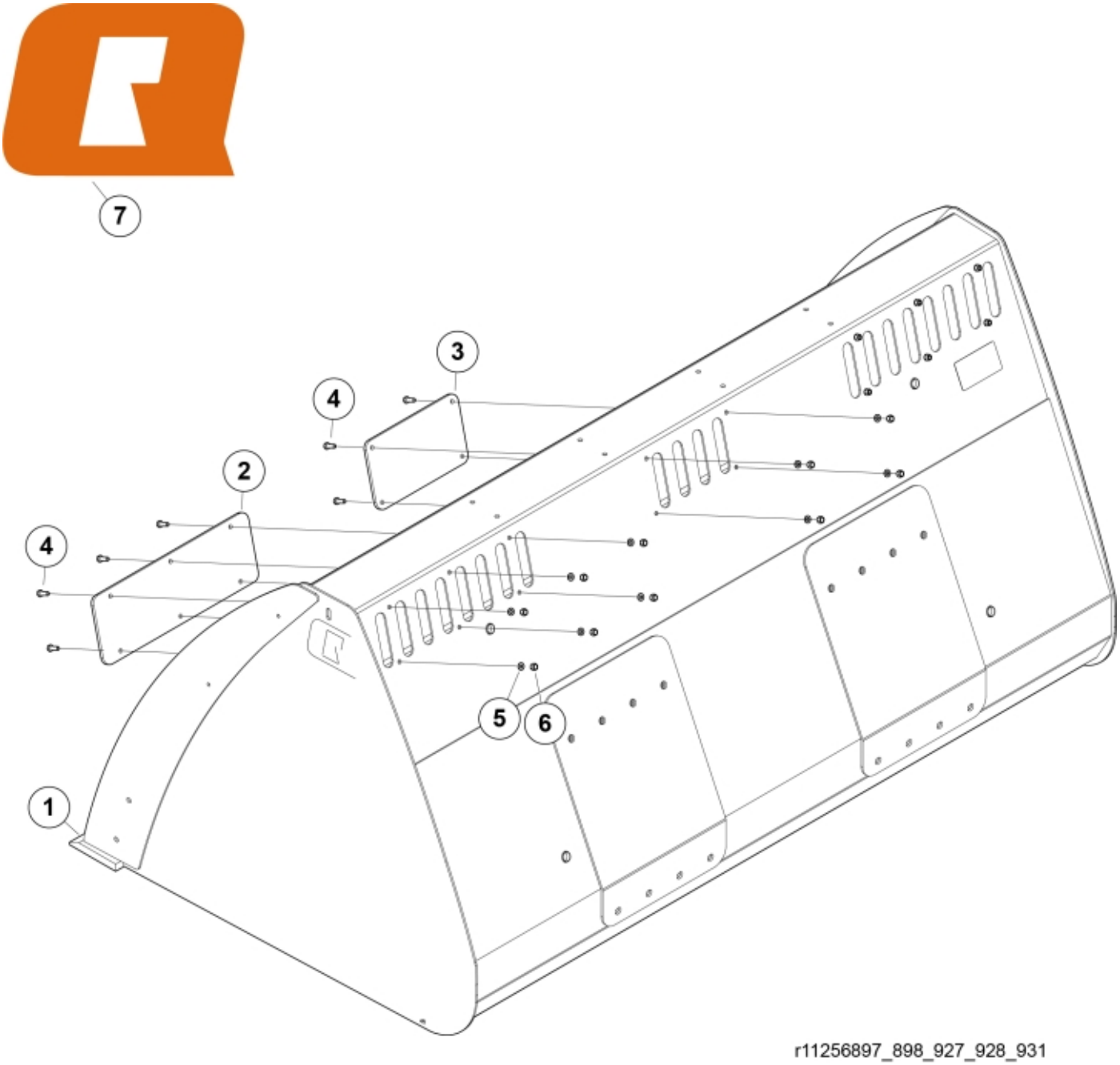

r11256897_898_927_928_931

© 2025 Jost

Part assemblies Bucket VM+ 180

PartNo	Pos	Qty	Name	Specifications
60120947	1	1	Cutting edge	
60123252	2	2	Cover plate	
60123260	3	1	Cover plate	
5002052	4	16	Screw	M6S M8x25
5013101	5	16	Washer	BRB 8,4 x 16
5011553	6	16	Nut	M6M M8 Loc-king
60056248	7	2	Decal	"Q" Large 158 mm
5022119		4	Plug	

© 2025 Jost