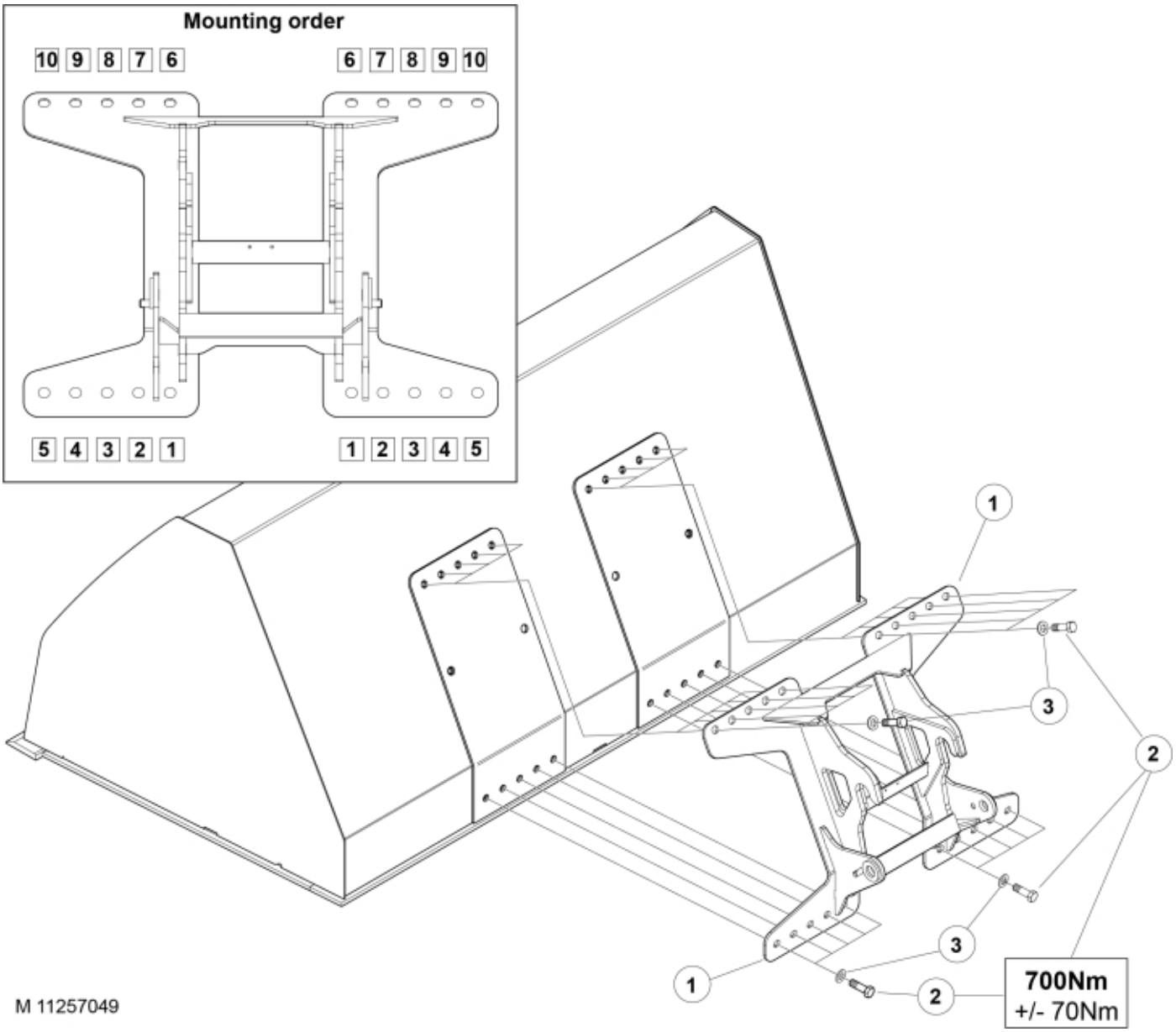
Mounting order
10 9 8 7 6
6 7 8 9 10
5 4 3 2 1
1 2 3 4 5
1
3
2
3
1
2
700Nm
+/- 70Nm
M 11257049

© 2025 Jost

Part assemblies Attachment kit Magni THA

PartNo	Pos	Qty	Name	Specifications
60125623	1	1	Attachment Magni	
60029905		1	Screw kit	
5051392	2	20	• Screw	M6S 24X75 (8.8)
5051393	3	20	• Washer	M24 Broad Wedge-Lock

© 2025 Jost