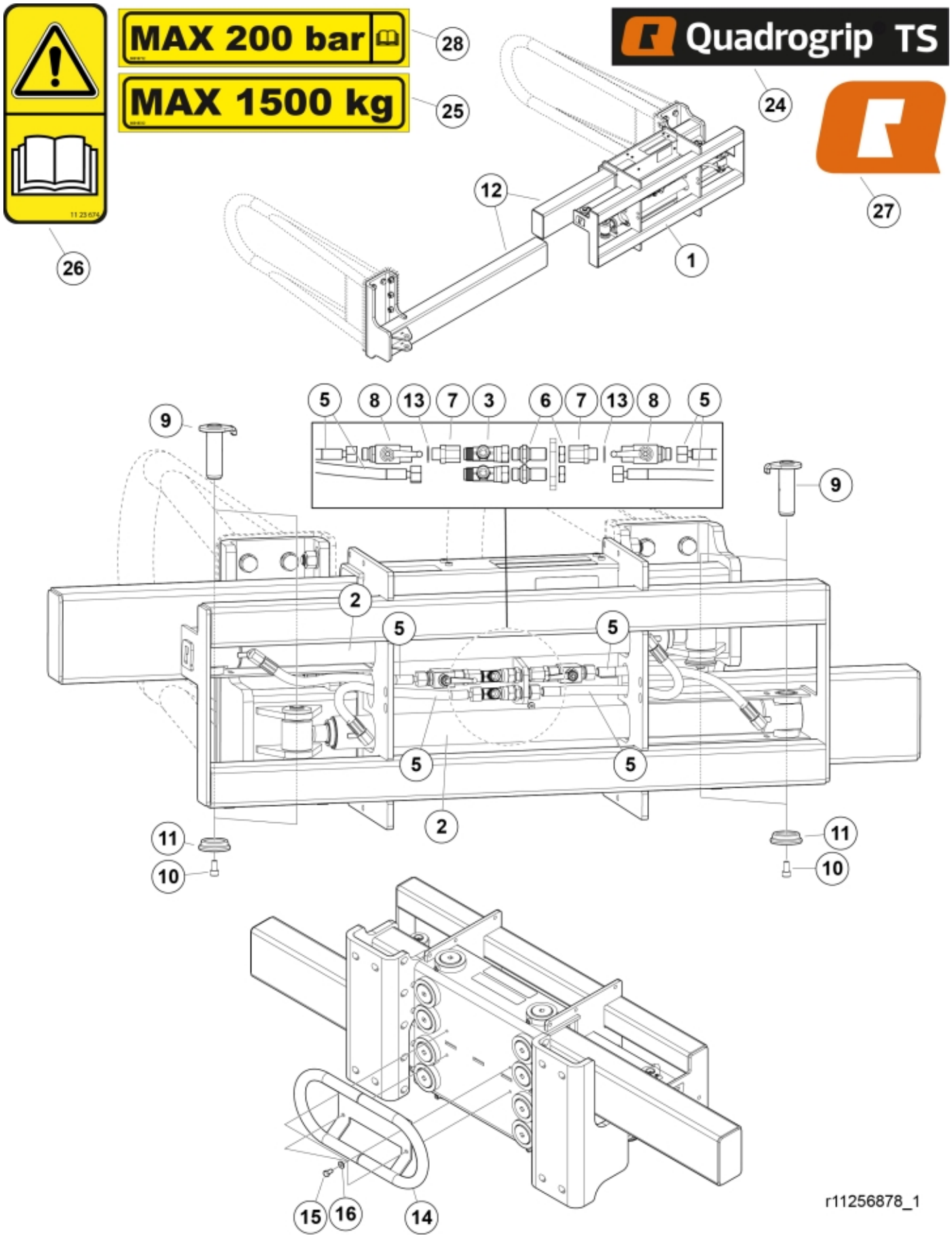

© 2025 Jost

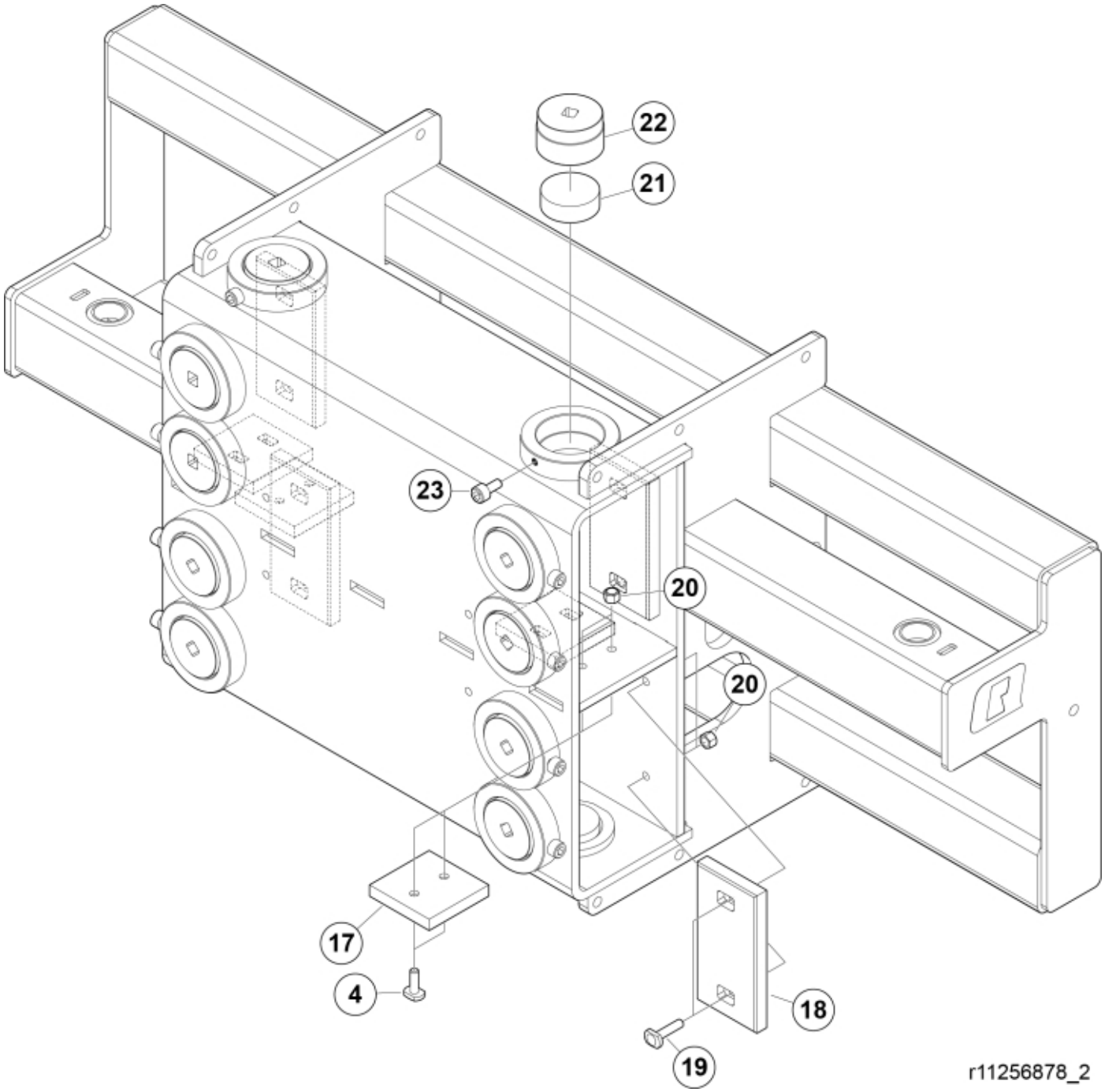

© 2025 Jost

Part assemblies	Quadrogrip TS
Specification	Year From: 4/8/2026 12:00:00 AM

PartNo	Pos	Qty	Name	Specifications
60086045-17	1	1	Frame	
60110577-1	2	2	Cylinder	4/11/2026 12:00:00 AM
5028031	3	2	T-Adapter	
5052058	4	8 PCS	Screw	M8x25 8.8
60043766	5	4 PCS	Hose	3/8" L=410 3/8G90LMC - 1/2GRLM
11120580	6	2	Adapter cpl.	
5027439	7	2 PCS	Adaptor	G1/2" - G1/2"
5033898	8	2	Shut-off valve	1/2"
60018047	9	4	Pivot Pin	D=30, L=96mm
5050608	10	4	Screw	MC6S M10x20 Loc
5215131	11	4	Locking cover	
60074809	12	2	Arm	
5013853	13	2	Dowty washer	Tredo 1/2", Part is included in kit 60007907 Hose cpl., 9032177 Hose cpl.
60119273-22	14	1	Bale support	
5002076	15	4	Screw	M6S M10 x 20 (8.8)
5013110	16	4	Washer	BRB 10.5x22x2
60060953	17	4 PCS	Slide plate	
60060944	18	4 PCS	Slide plate	
5052013	19	8 PCS	Screw	M8x35 8.8
5011553	20	16	Nut	M6M M8 Loc-king
60086139	21	12	Slide plate	
60086096	22	12	Retainer	
5053557	23	12	Screw	MC6S M8x20 Locking
60044466	24	1 PCS	Decal	"Quadrogrip TS"
60018512	25	1 PCS	Warning decal	Max 1500 kg
1123674	26	1	Warning decal	"Read manual"
60056626	27	2	Decal	
60018712	28	1	Warning decal	

© 2025 Jost