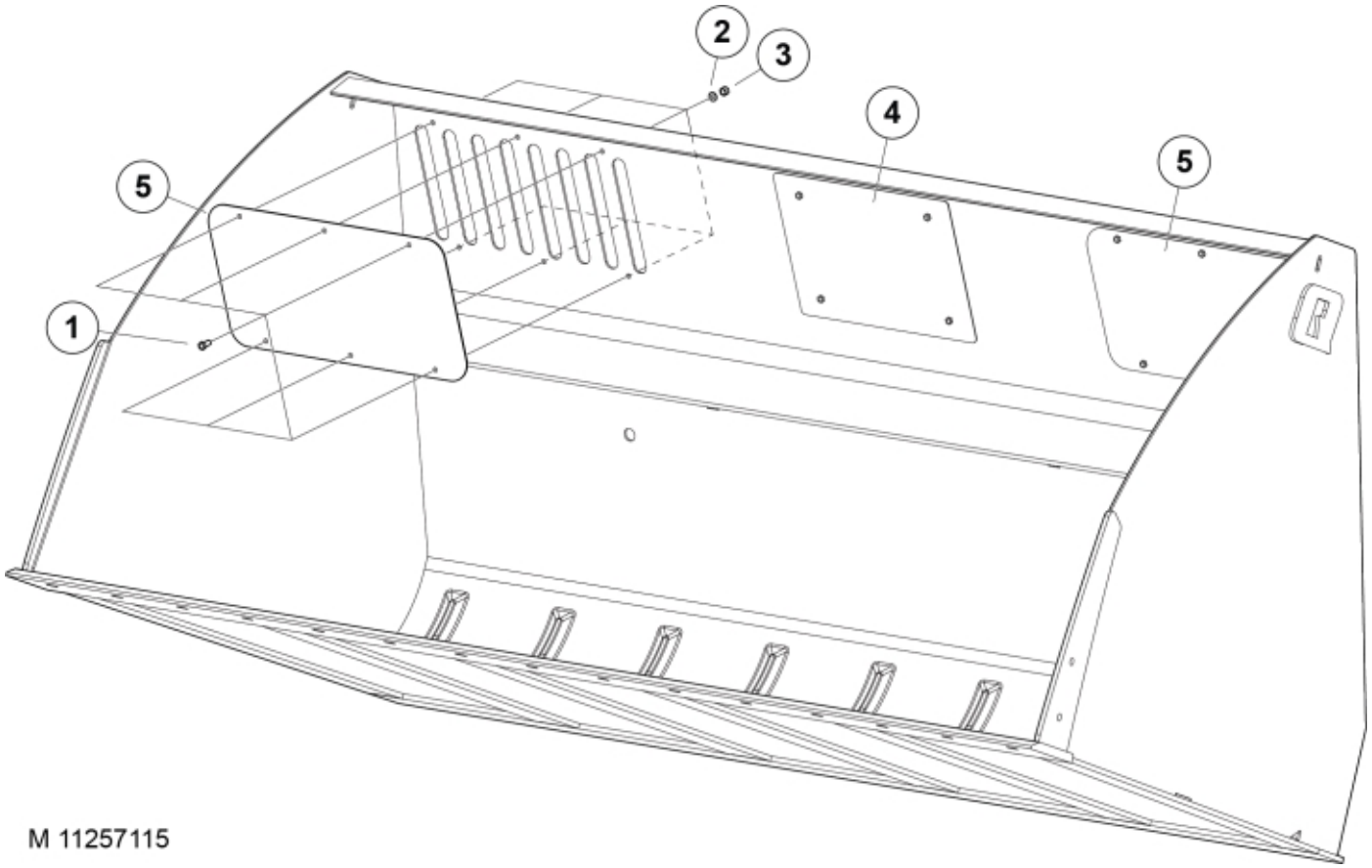

M 11257115

© 2025 Jost

Part assemblies Cover kit

PartNo	Pos	Qty	Name	Specifications
	1	16	Screw	M6S 8 x 20
	2	16	Washer	BRB 8,4 x 16
	3	16	Nut	M6M M8 Loc-king
	4	1	Cover plate	
	5	2	Cover plate	

© 2025 Jost