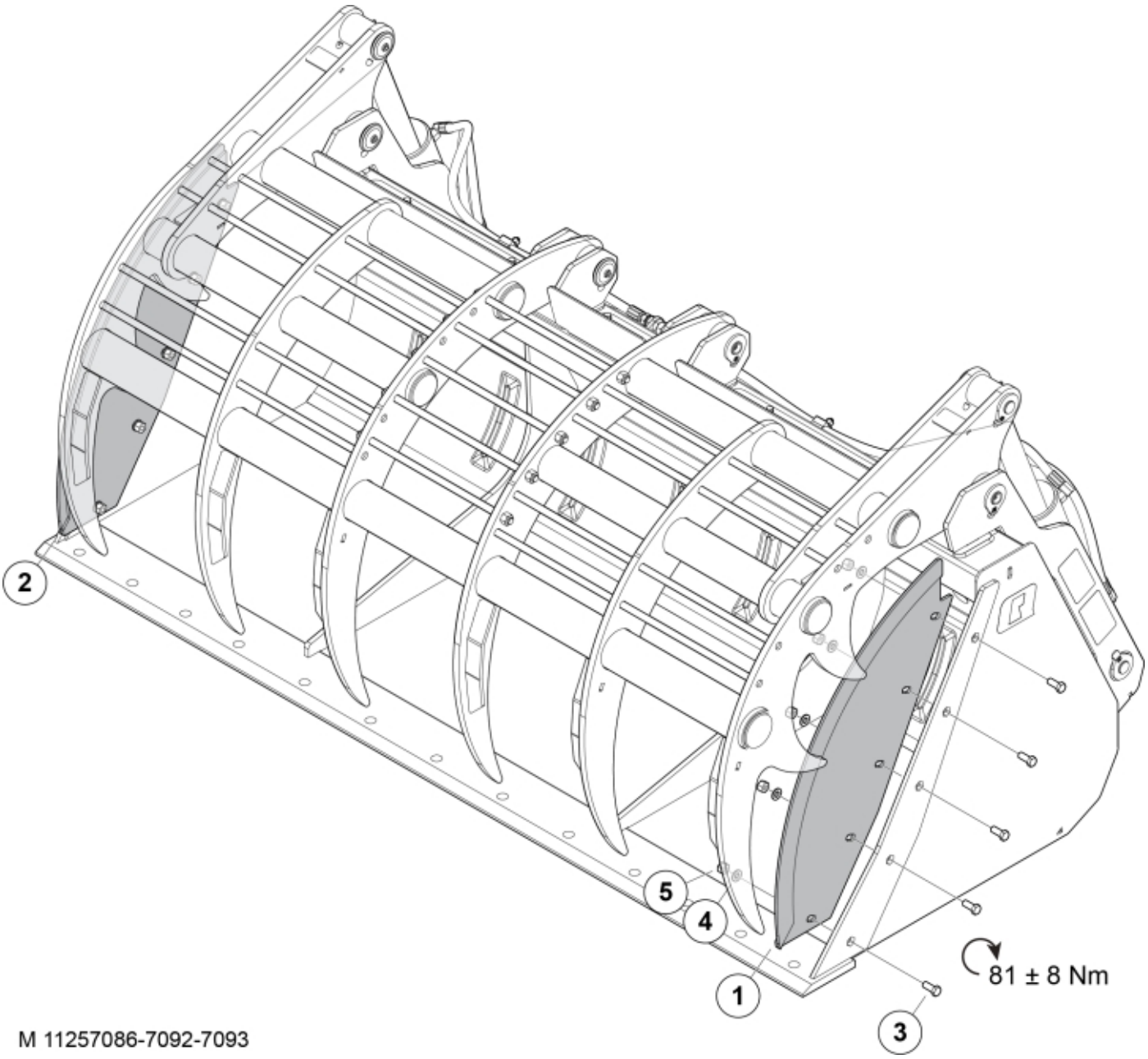

M 11257086-7092-7093

© 2025 Jost

Part assemblies Bolt on Gable

PartNo	Pos	Qty	Name	Specifications
	1	1	Gable LH	
	2	1	Gable RH	
5002102	3	10	Screw	M6S M12X30
5013104	4	10	Washer	13.5 x 24 x 2
5011555	5	10	Nut	M12 Loc

© 2025 Jost