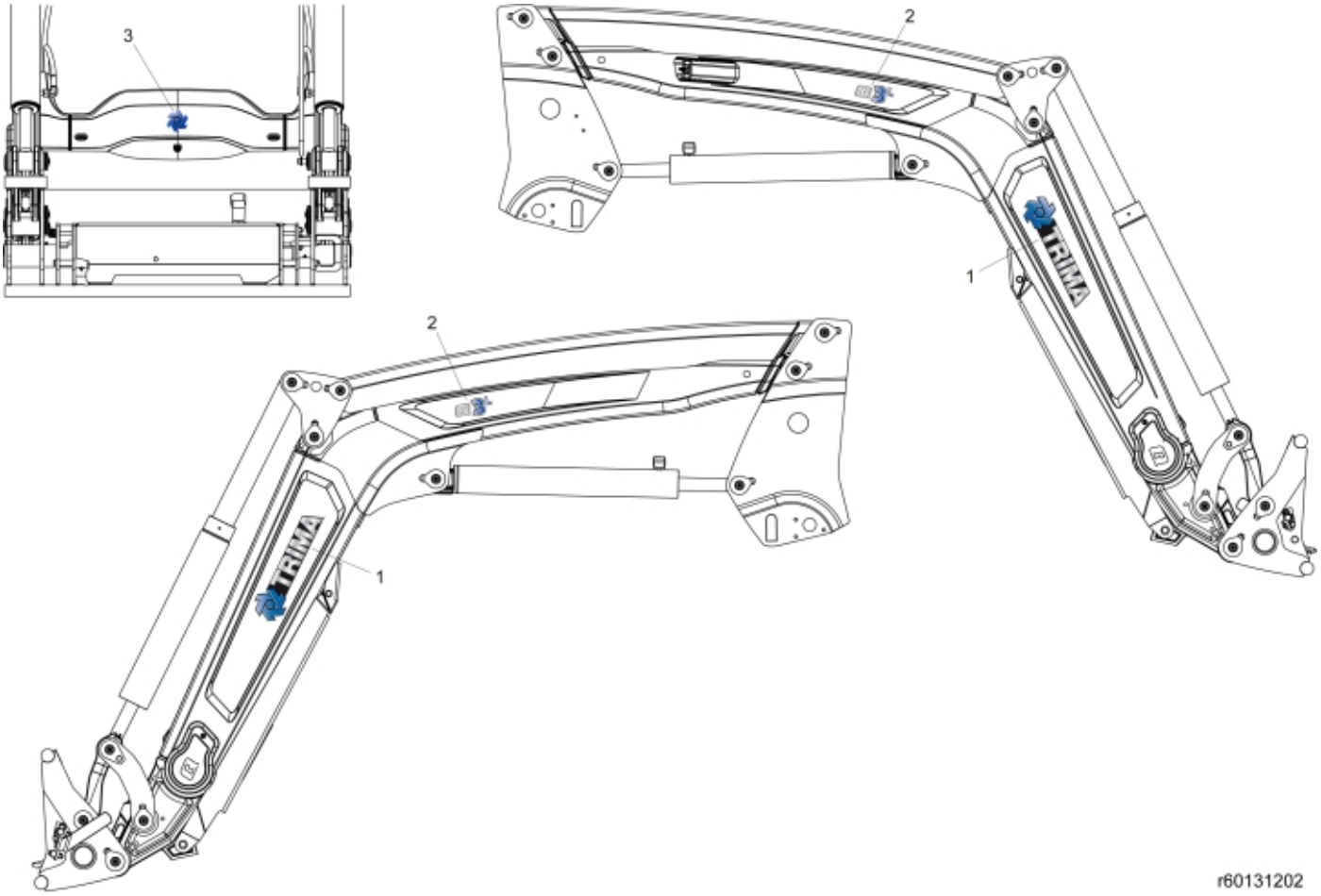

© 2025 Jost

Description	Q3L
Part assemblies	Decals
Specification	Year From: 5/1/2026 12:00:00 AM

PartNo	Pos	Qty	Name	Specifications
60107907	1	2	Decal, Brand	Trima
60107933	2	2 PCS	Decal, Model	Q3L
60130911	3	1	Decal	Centre Cover Trima

© 2025 Jost