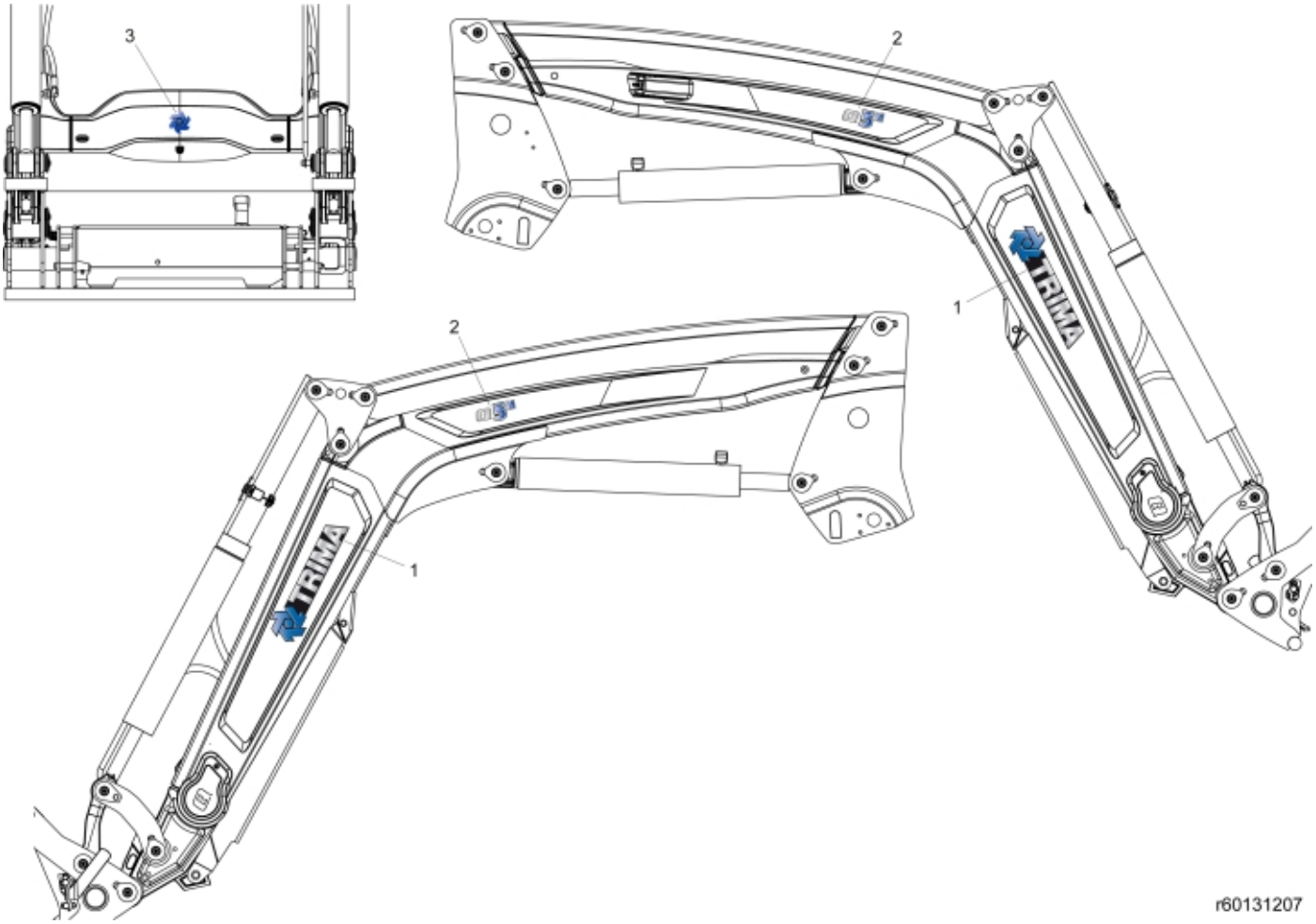



© 2025 Jost

| | |
|---|---|
| **Description** | Q5M |
| **Part assemblies** | Decals |
| **Specification** | Year From: 5/1/2026 12:00:00 AM |

| PartNo | Pos | Qty | Name | Specifications |
|---|---|---|---|---|
| 11135054 | 1 | 2 PCS | Decal, Brand | |
| 60107940 | 2 | 2 PCS | Decal, Model | Q5M |
| 60130911 | 3 | 1 | Decal | Centre Cover Trima |


© 2025 Jost