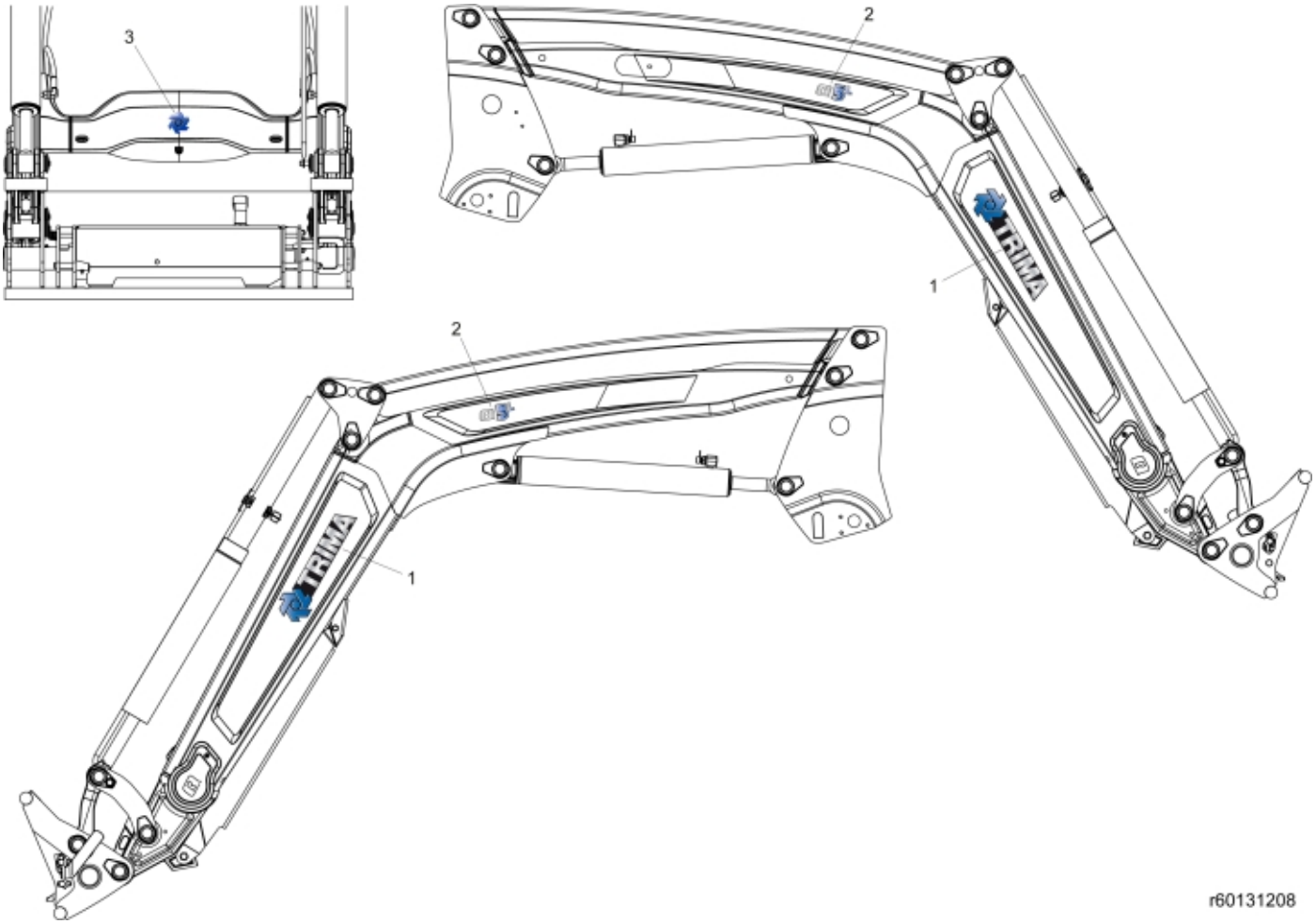

© 2025 Jost

Description	Q5L
Part assemblies	Decals
Specification	Year From: 5/1/2026 12:00:00 AM

PartNo	Pos	Qty	Name	Specifications
11135054	1	2 PCS	Decal, Brand	
60107941	2	2 PCS	Decal, Model	Q5L
60130911	3	1	Decal	Centre Cover Trima

© 2025 Jost