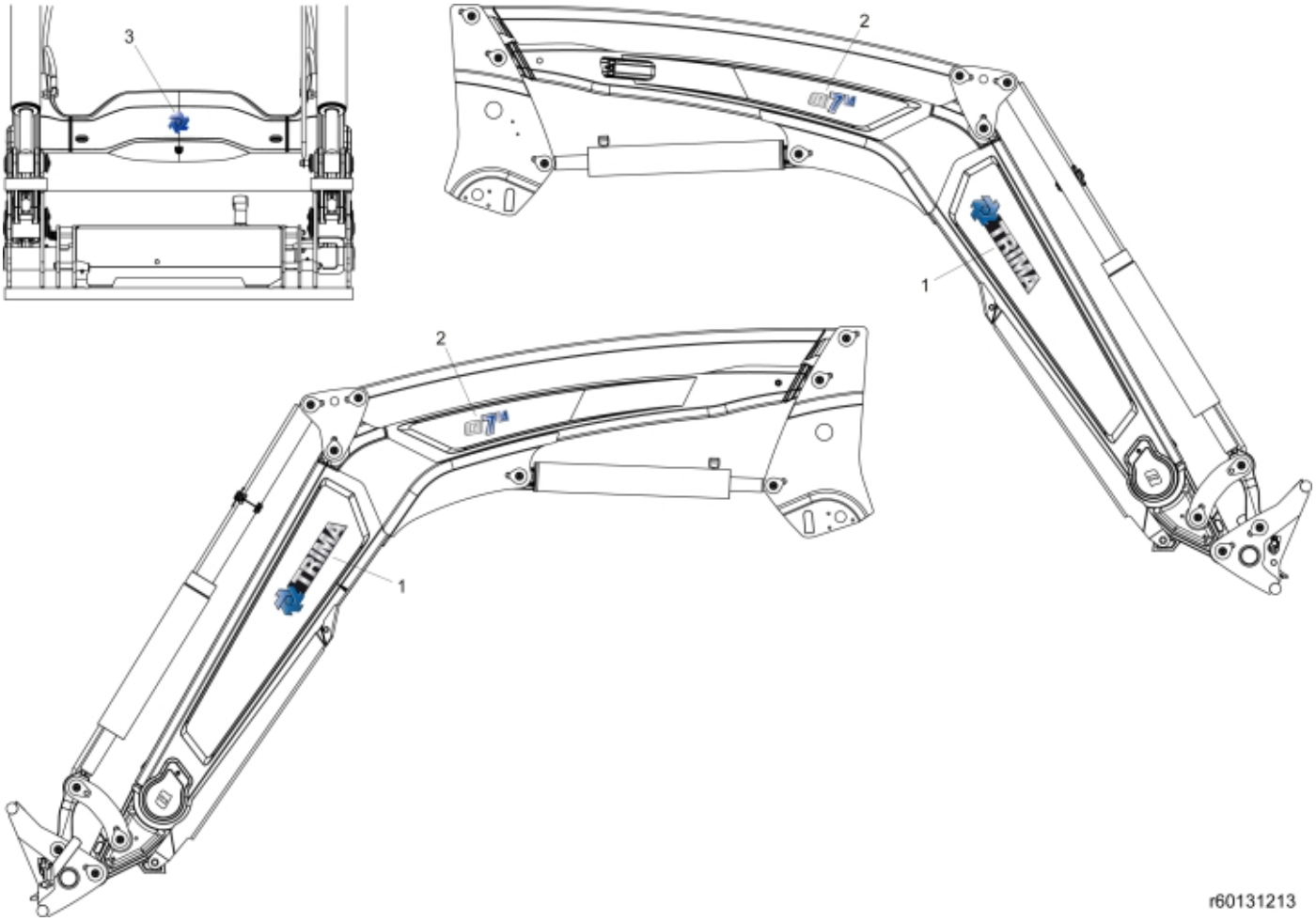

© 2025 Jost

Description	Q7M
Part assemblies	Decals

PartNo	Pos	Qty	Name	Specifications
11135054	1	2 PCS	Decal, Brand	
60107947	2	2 PCS	Decal, Model	Q7M
60130911	3	1	Decal	Centre Cover Trima

© 2025 Jost