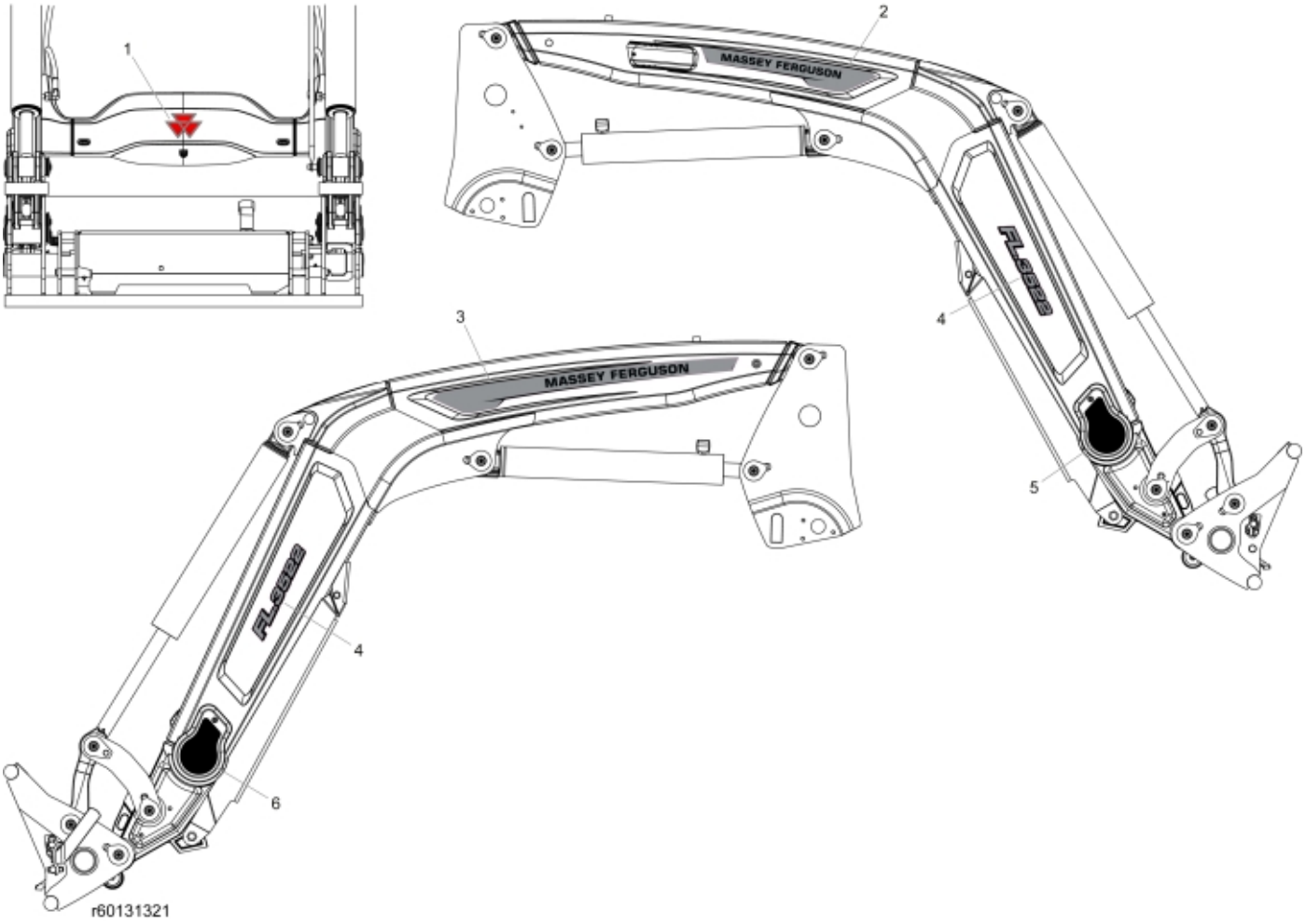
1
2
MASSEY FERGUSON
FL6028
4
5
3
MASSEY FERGUSON
FL6028
4
6
r60131321


© 2025 Jost

| | |
|---|---|
| **Description** | FL3522 |
| **Part assemblies** | Decals |
| **Specification** | Year From: 5/1/2026 12:00:00 AM |

| PartNo | Pos | Qty | Name | Specifications |
|---|---|---|---|---|
| 60103941 | 1 | 1 | Decal | MF Centre Cover |
| 60102990 | 2 | 1 | Decal Brand, RH | |
| 60102985 | 3 | 1 | Decal Brand, LH | |
| 60102971 | 4 | 2 | Decal, Model | FL3522 |
| 60129384 | 5 | 1 | Decal RH | Cover, small |
| 60127612 | 6 | 1 | Decal LH | Cover, small |


© 2025 Jost