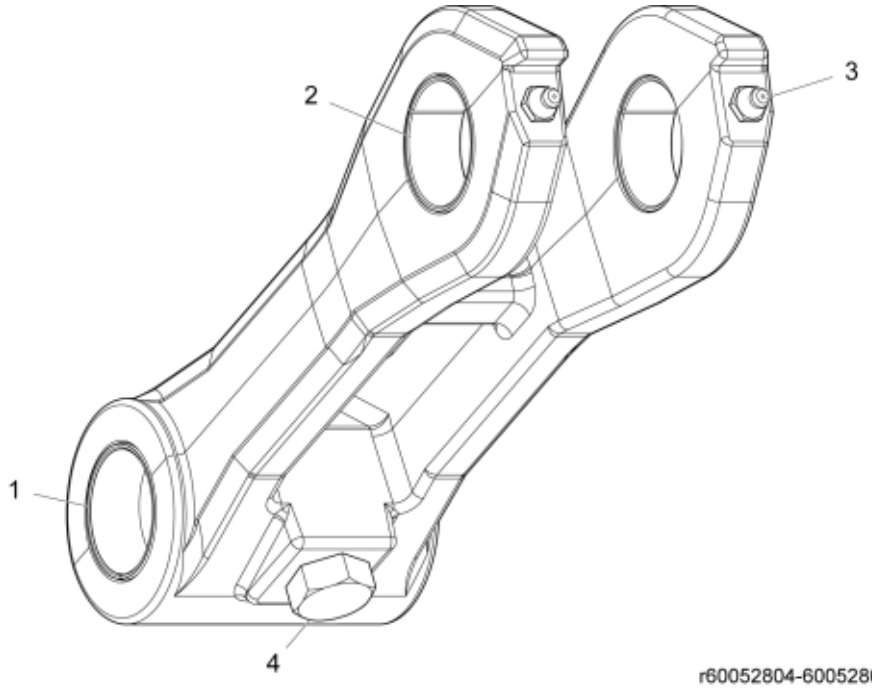

© 2025 Jost

Part assemblies	Link w. bushings
Specification	Specification: Glossy Black

PartNo	Pos	Qty	Name	Specifications
5018513	1	2	Bushing	D40 L=20
5018514	2	2	Bushing	D35 L=20
5023005	3	2	Greaser	M 10 x 1
5002172	4	1	Screw	M6S M16x20

© 2025 Jost