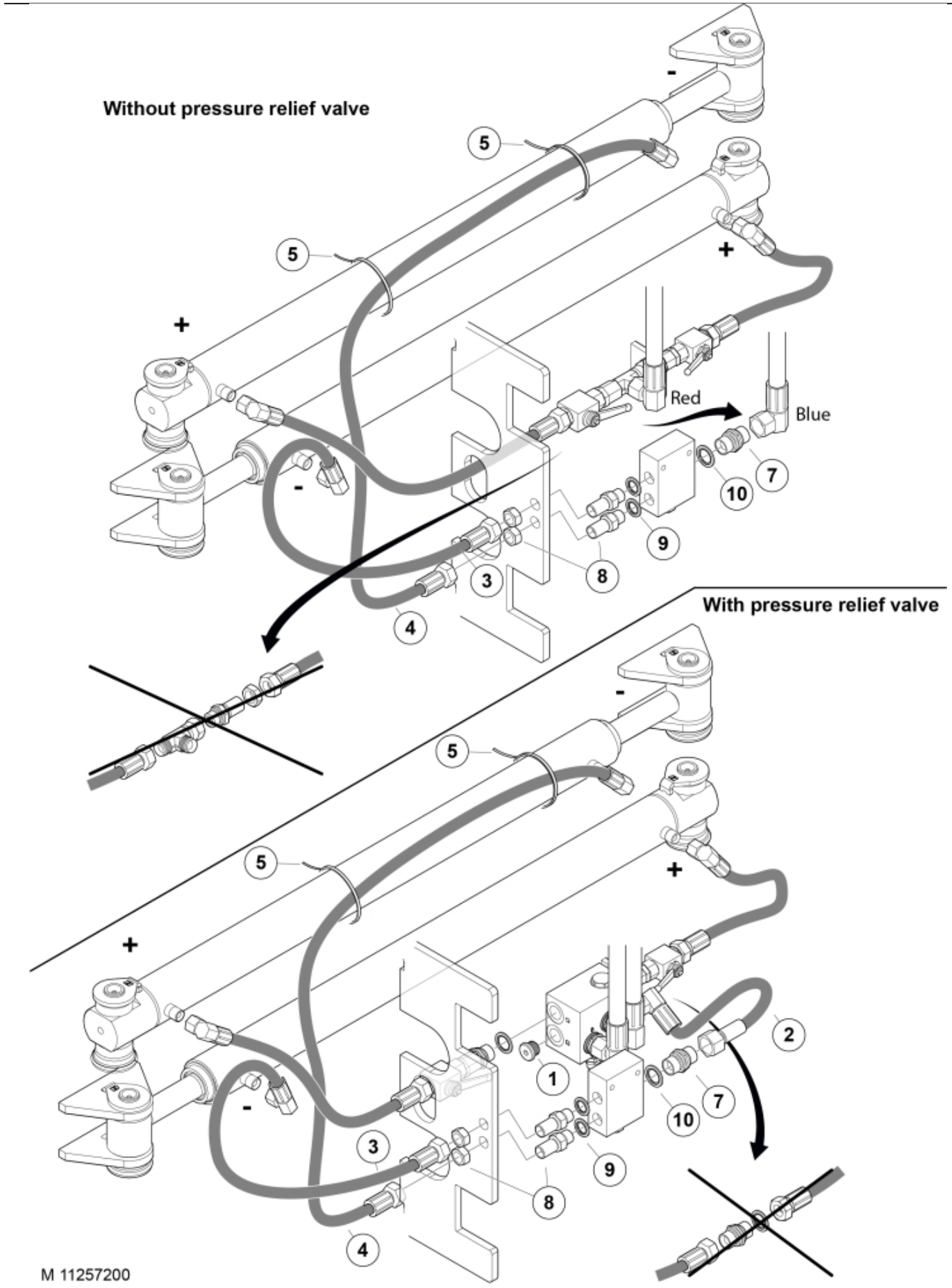
Without pressure relief valve
With pressure relief valve
Red
Blue
M 11257200

© 2025 Jost

Part assemblies	Flow divider
Specification	Year From: 12/11/2025 12:00:00 AM

PartNo	Pos	Qty	Name	Specifications
5028245	1	1	Plug	G1/2"
60045053	2	1 PCS	Hose	1/2" L=380 1/2GRLM 1/2G90LM
60045054	3	1 PCS	Hose	3/8" L=400 3/8GRLM 3/8 G90LMC
60045055	4	1 PCS	Hose	3/8" L=1000 3/8GRLM 3/8G90LMC
5033606	5	2	Cable tie	7,5 x 385
1120012	7	1	Adaptor	G 1/2"
5027960	8	2	Adaptor	R3/8"
5013852	9	2	Dowty washer	Tredo 3/8"
5013853	10	1	Dowty washer	Tredo 1/2", Part is included in kit 60007907 Hose cpl., 9032177 Hose cpl.

© 2025 Jost