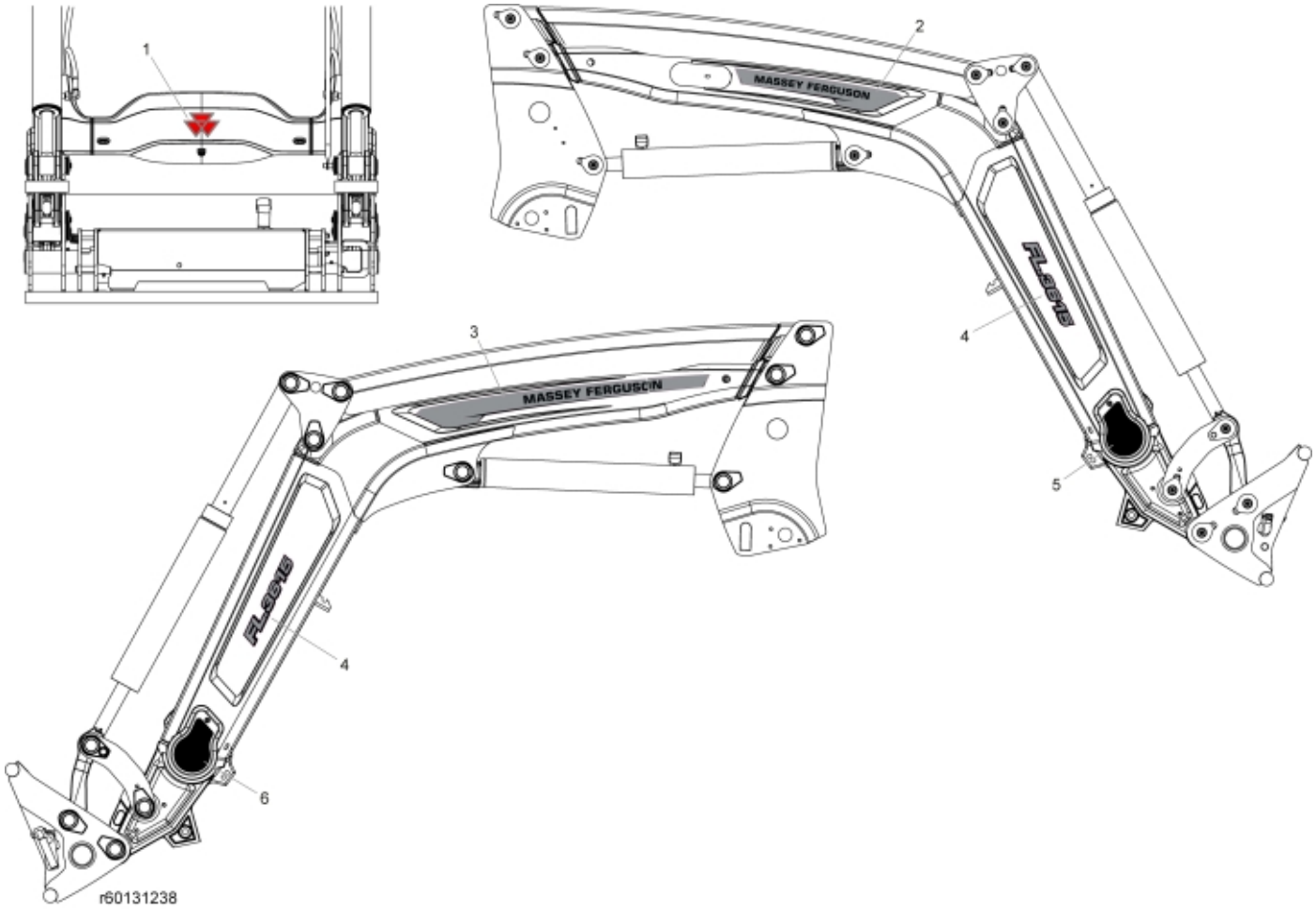

© 2025 Jost

Description	FL3615
Part assemblies	Decals
Specification	Year From: 5/1/2026 12:00:00 AM

PartNo	Pos	Qty	Name	Specifications
60103941	1	1	Decal	MF Centre Cover
60102990	2	1	Decal Brand, RH	
60102985	3	1	Decal Brand, LH	
60102992	4	2	Decal, Model	FL3615
60129384	5	1	Decal RH	Cover, small
60127612	6	1	Decal LH	Cover, small

© 2025 Jost