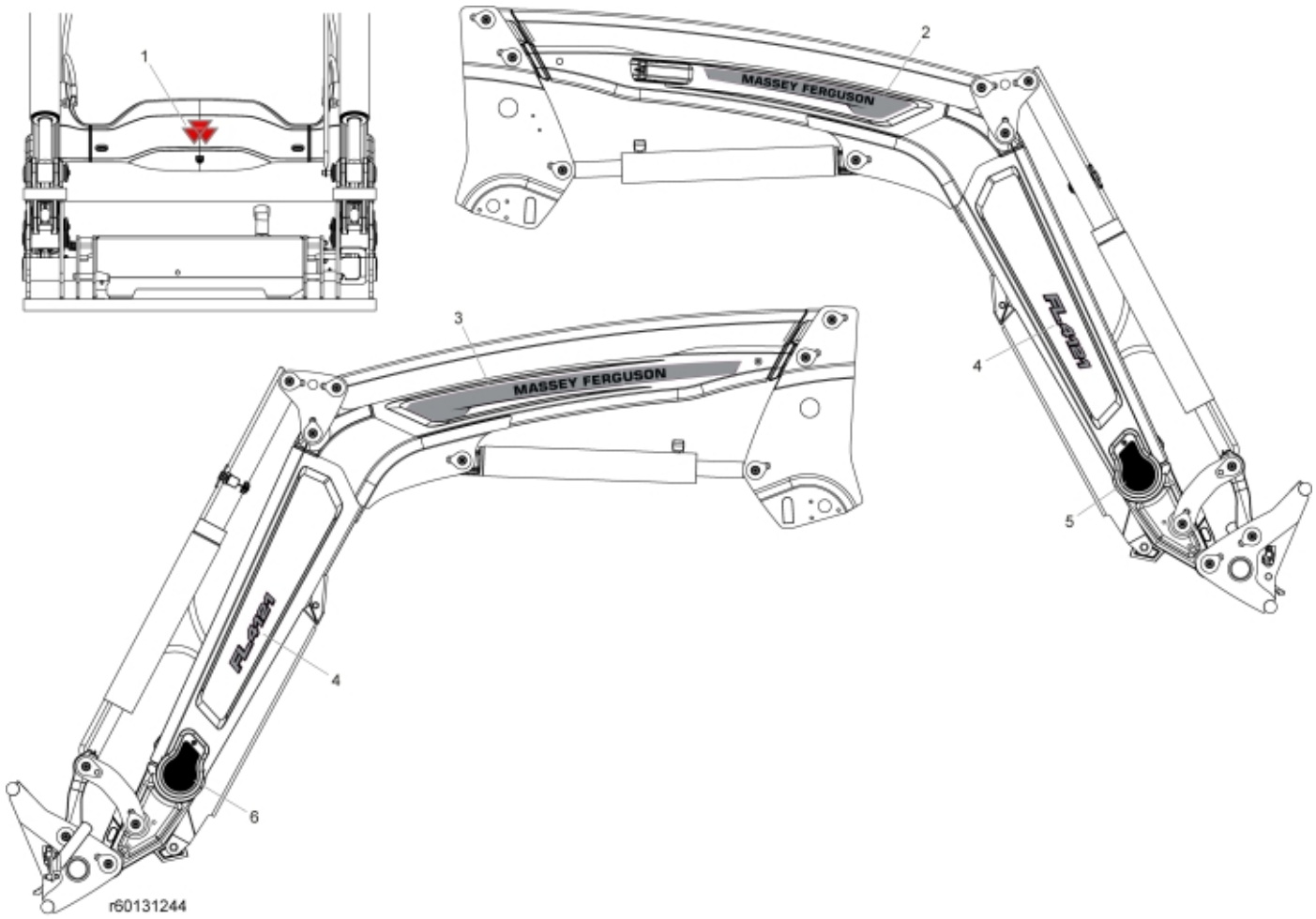
1
2
MASSEY FERGUSON
FL40EH
4
5
3
MASSEY FERGUSON
FL40EH
4
6
r60131244

© 2025 Jost

Description	FL4121
Part assemblies	Decals
Specification	Year From: 5/1/2026 12:00:00 AM

PartNo	Pos	Qty	Name	Specifications
60103941	1	1	Decal	MF Centre Cover
60103001	2	1	Decal Brand, RH	
60102994	3	1	Decal Brand, LH	
60103272	4	2	Decal, Model	FL4121
60129384	5	1	Decal RH	Cover, small
60127612	6	1	Decal LH	Cover, small

© 2025 Jost