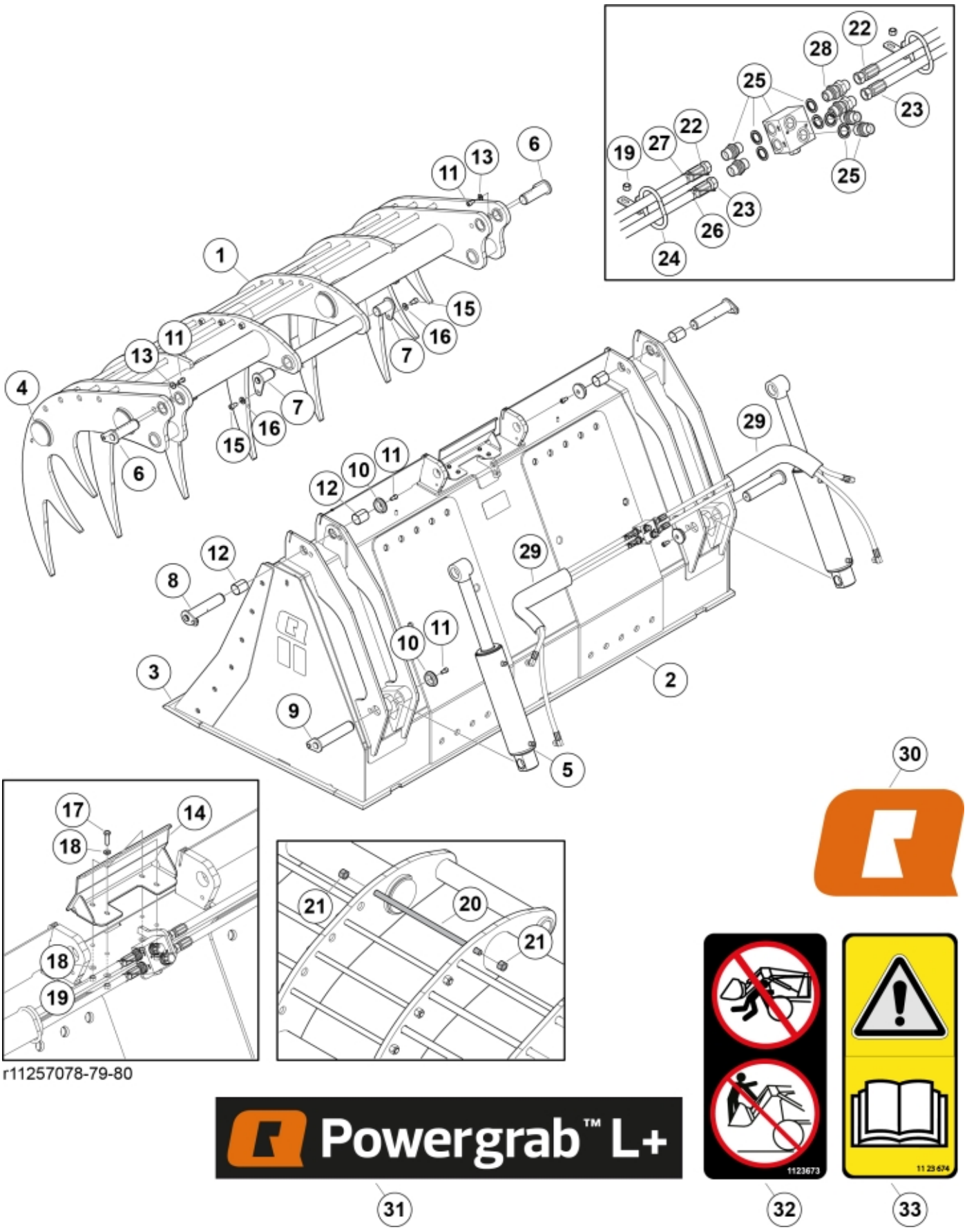

r11257078-79-80

© 2025 Jost

Part assemblies Powergrab L+ 240

PartNo	Pos	Qty	Name	Specifications
60128416-17	1	1	Jaw	
60128414-17	2	1	Bucket	
60068687	3	1	• Cutting edge	
11261471	4	6	Plastic cover	
60119714-1	5	2	Cylinder	2/4/2026 12:00:00 AM
60128577	6	2	Pin cpl.	
60077754	7	2	Pin cpl.	
60074369	8	2	Pin cpl.	
60128557	9	2	Pin cpl.	
5215131	10	4	Locking cover	
5050608	11	6	Screw	MC6S M10x20 Loc
5052083	12	4	Bushing	
5053440	13	2	Washer	
60128383-22	14	1	Spillguard	
5004933	15	2	Screw	MC6S M12 x 20 (8.8)
5050017	16	2	Washer	BRB - 13x27x2 350HV
5002053	17	4	Screw	M6S 8 x 30
5013101	18	8	Washer	BRB 8,4 x 16
5011553	19	6	Nut	M6M M8 Loc-king
60128393-22	20	4	Rod	
5011556	21	8	Nut	M14
60085712	22	2	Hose	
60085713	23	2	Hose	
60077857	24	2	Hose guide	
60071811	25	1 PCS	Pressure relief valve kit	
5022177	26	1	Cable tie	Red
5022179	27	1	Cable tie	Blue
11120580	28	2	Adapter cpl.	
60087000	29	2	Hose cover	
60056248	30	2	Decal	"Q" Large 158 mm
60074800	31	2	Decal	"Powergrab L+"
1123673	32	1	Warning decal	
1123674	33	1	Warning decal	"Read manual"

© 2025 Jost