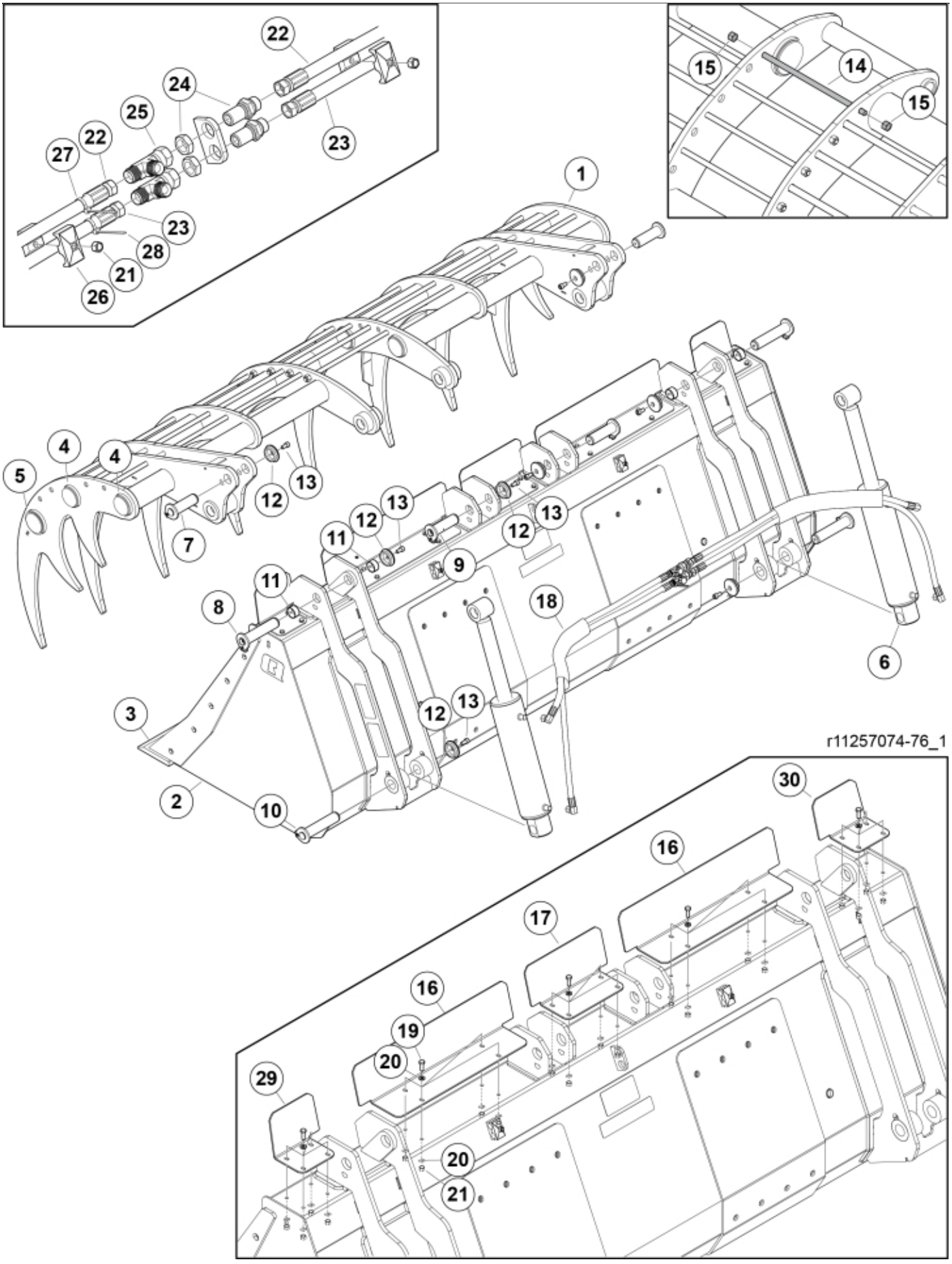
22
24
25
23
27
22
23
28
21
26
15
14
15
1
4
4
5
12
13
7
12
13
11
12
13
12
13
9
11
18
8
6
3
12
13
2
10
r11257074-76_1
30
16
17
16
19
20
29
20
21

© 2025 Jost



32



33



34



35



31

r11257074-76_2

© 2025 Jost

Part assemblies Powergrab M+ 260

PartNo	Pos	Qty	Name	Specifications
60128262-17	1	1	Jaw	
60128307-17	2	1	Bucket	
60044982	3	1 PCS	Cutting edge	
60087418	4	8	Plastic cover	
60080455	5	2	Plastic cover	
60119719-1	6	2	Cylinder	1/2/2026 12:00:00 AM
60128541	7	2	Pin cpl.	
9020093	8	2 PCS	Pin cpl.	
9020107	9	2 PCS	Pin	D=35, L=116
60128551	10	2	Pin cpl.	
5018514	11	4	Bushing	D35 L=20
5215131	12	8	Locking cover	
5050608	13	8	Screw	MC6S M10x20 Loc
60087936-22	14	5	Rod	
5011556	15	10	Nut	M14
60086282-17	16	2	Spillguard	
60086286-22	17	1	Spillguard	
60087000	18	2	Hose cover	
5002052	19	10	Screw	M6S M8x25
5013101	20	20	Washer	BRB 8,4 x 16
5011553	21	12	Nut	M6M M8 Loc-king
60057104	22	2	Hose	3/8" L=1050 1/2GRLM 3/8G90LMC
60057105	23	2	Hose	3/8" L=1250 1/2GRLM 3/8G90LMC
11120580	24	2	Adapter cpl.	
5028031	25	2	T-Adapter	
5016968	26	2	Hose clamp	
5022179	27	1	Cable tie	Blue
5022177	28	1	Cable tie	Red
60128311-17	29	1	Spillguard LH	
60128312-17	30	1	Spillguard RH	
60056616	31	2	Decal	"Q" medium 110mm
60079564	32	2	Decal	Powergrab M+
60071733	33	1	Decal	"Max 210 bar"
1123673	34	1	Warning decal	
1123674	35	1	Warning decal	"Read manual"

© 2025 Jost