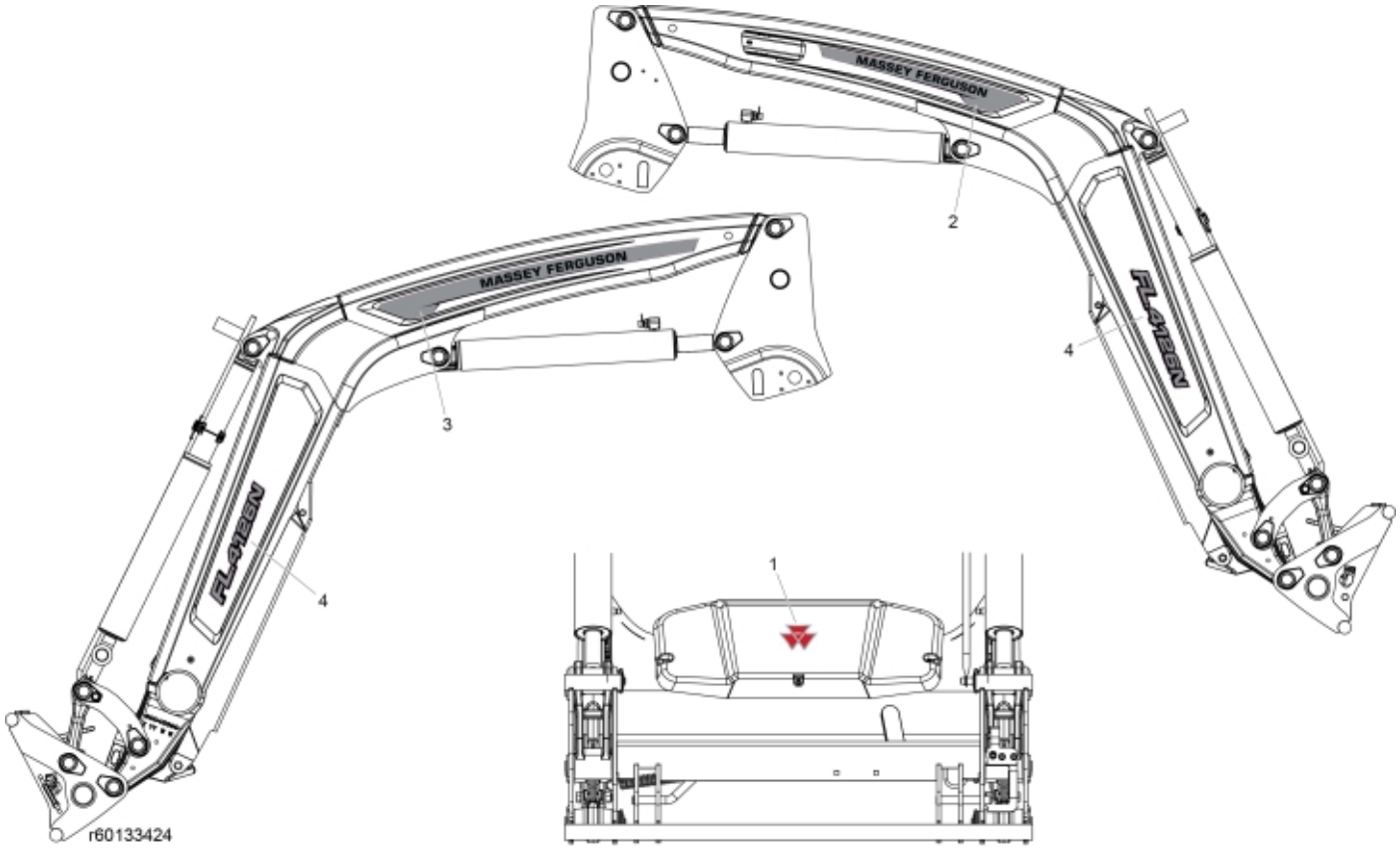
MASSEY FERGUSON
MASSEY FERGUSON
FLAIBEN
FLAIBEN
1
2
3
4
4
r60133424

© 2025 Jost

Description	FL.4126N
Part assemblies	Decals

PartNo	Pos	Qty	Name	Specifications
60114546	1	1	Decal	MF Centre Cover
60103001	2	1	Decal Brand, RH	
60102994	3	1	Decal Brand, LH	
60132956	4	2	Decal, Model	FL.4126N

© 2025 Jost