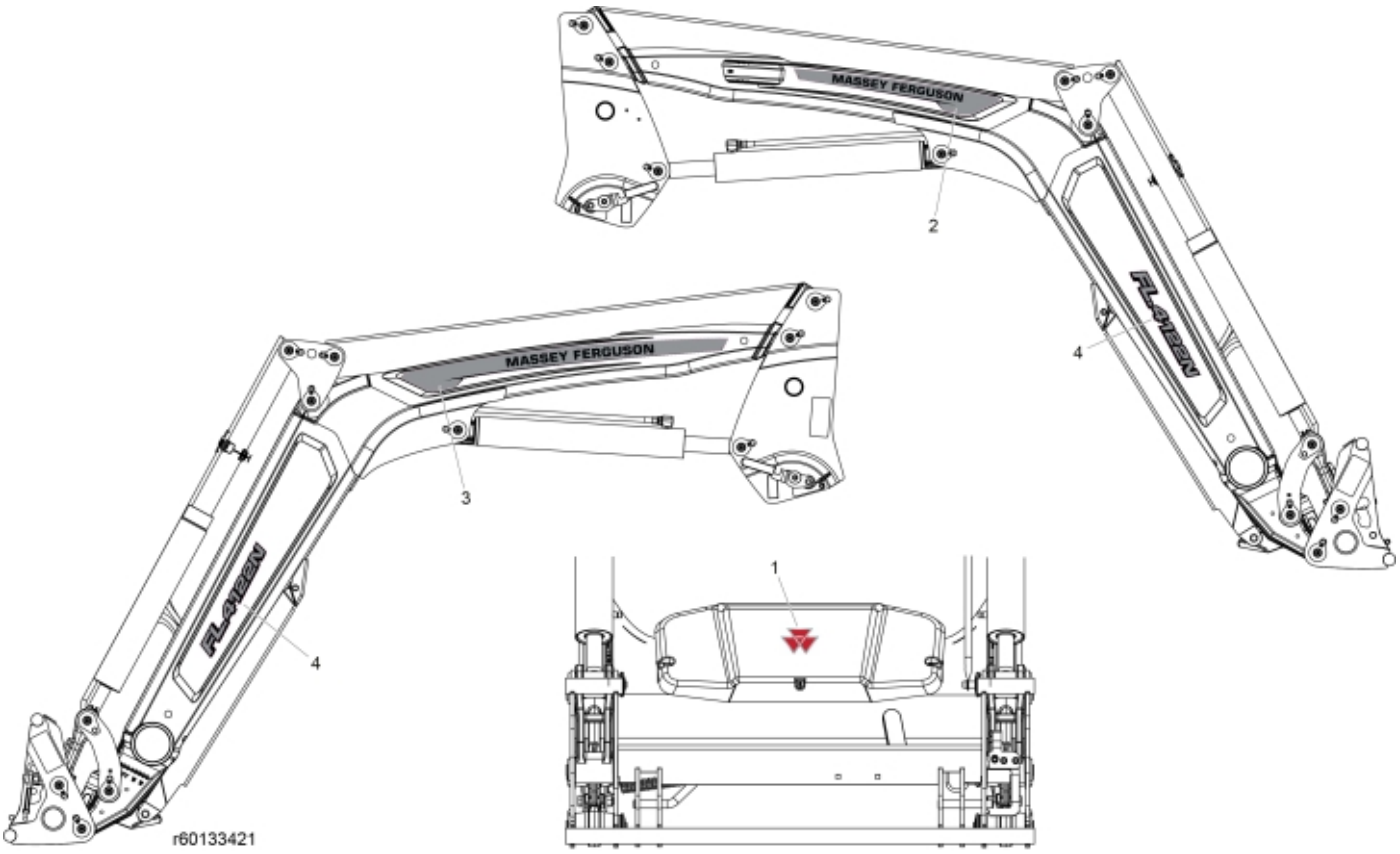

© 2025 Jost

Description	FL.4122N
Part assemblies	Decals

PartNo	Pos	Qty	Name	Specifications
60114546	1	1	Decal	MF Centre Cover
60103001	2	1	Decal Brand, RH	
60102994	3	1	Decal Brand, LH	
60132953	4	2	Decal, Model	FL.4122N

© 2025 Jost