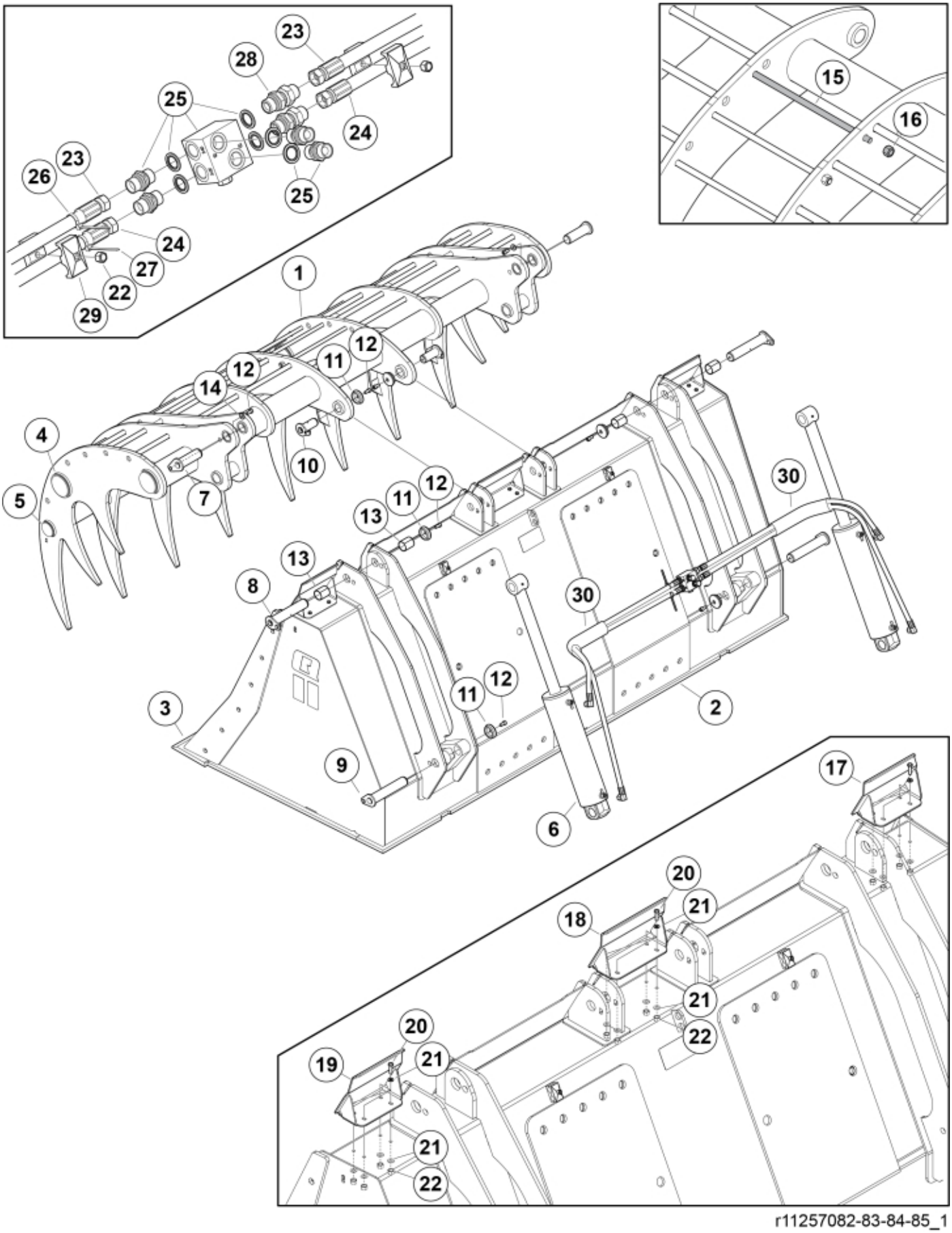

r11257082-83-84-85_1

© 2025 Jost



r11257082-83-84-85_2

© 2025 Jost

Part assemblies Powergrab XL+ 280

PartNo	Pos	Qty	Name	Specifications
60128489-17	1	1	Jaw	
60128487-17	2	1	Bucket	
60075771	3	1	• Cutting edge	
11261471	4	6	Plastic cover	
60075512	5	2	Plastic cover	
60119720-1	6	2	Cylinder	8/31/2026 12:00:00 AM
60128577	7	2	Pin cpl.	
60077887	8	2	Pin cpl.	
60128594	9	2	Pin cpl.	
60018059	10	2	Pivot Pin	D=35, L84mm
5215131	11	6	Locking cover	
5050608	12	8	Screw	MC6S M10x20 Loc
5052083	13	4	Bushing	
5053440	14	2	Washer	
60128393-22	15	5	Rod	
5011556	16	10	Nut	M14
60129107-22	17	1	Spillguard RH	
60128458-22	18	1	Spillguard	
60128547-22	19	1	Spillguard LH	
5002053	20	12	Screw	M6S 8 x 30
5013101	21	24	Washer	BRB 8,4 x 16
5011553	22	14	Nut	M6M M8 Loc-king
60083944	23	2	Hose	
60083945	24	2	Hose	
60071811	25	1 PCS	Pressure relief valve kit	
5022179	26	1	Cable tie	Blue
5022177	27	1	Cable tie	Red
11120580	28	2	Adapter cpl.	
5016968	29	2	Hose clamp	
60087000	30	2	Hose cover	
60056248	31	2	Decal	"Q" Large 158 mm
60074801	32	1	Decal	
1123673	33	1	Warning decal	
1123674	34	1	Warning decal	"Read manual"

© 2025 Jost