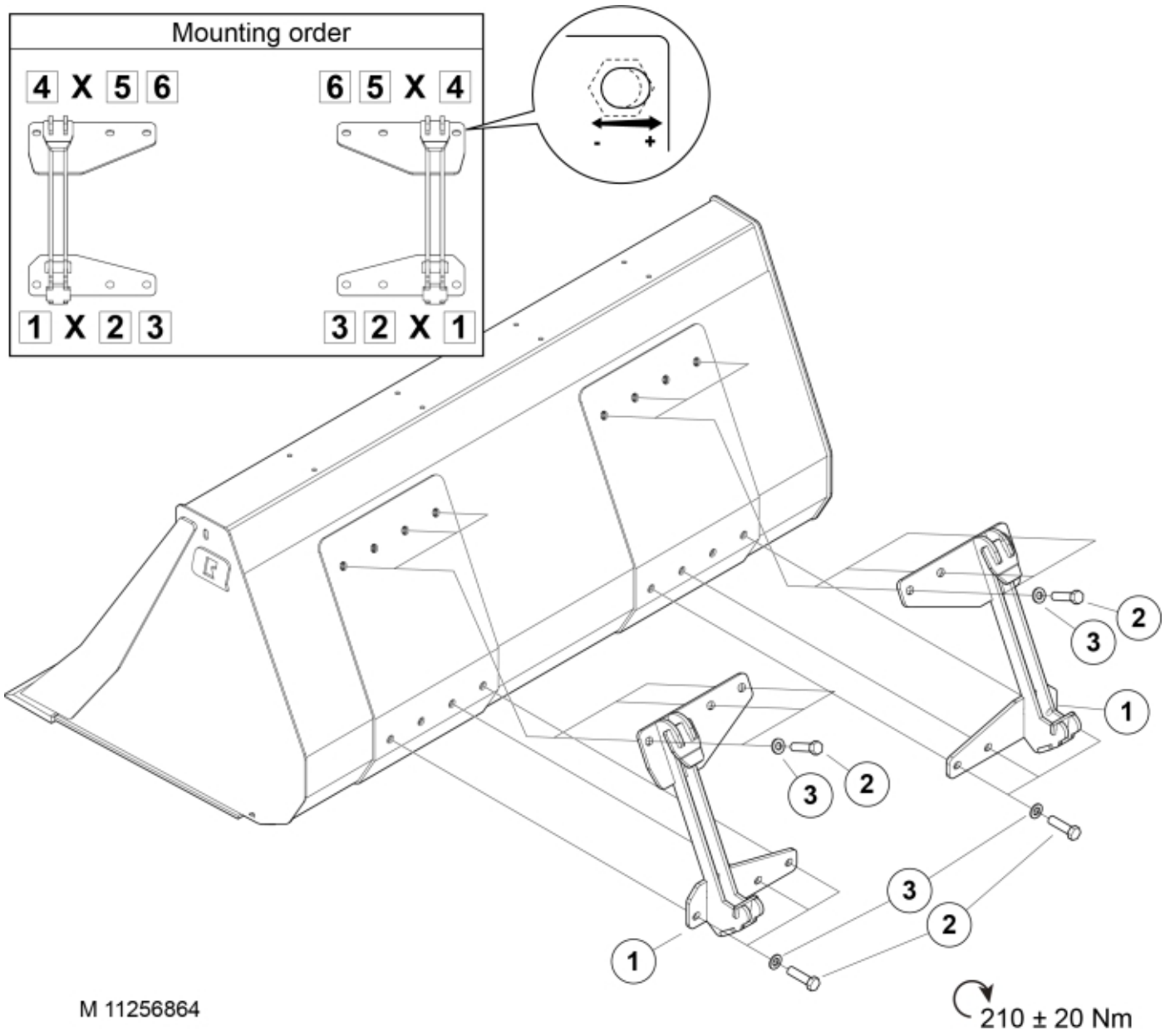
Mounting order
4 X 5 6
6 5 X 4
1 X 2 3
3 2 X 1
- +
3
2
1
3
2
3
2
1
M 11256864
210 ± 20 Nm

© 2025 Jost

Part assemblies Attachment kit Tenias

PartNo	Pos	Qty	Name	Specifications
60118198	1	1	Attachment Tenias	
60047988		2	Bolt kit	M16
5002153	2	8	• Screw	M6S M16 x 45
5051493	3	8	• Washer	M16

© 2025 Jost