Quicke

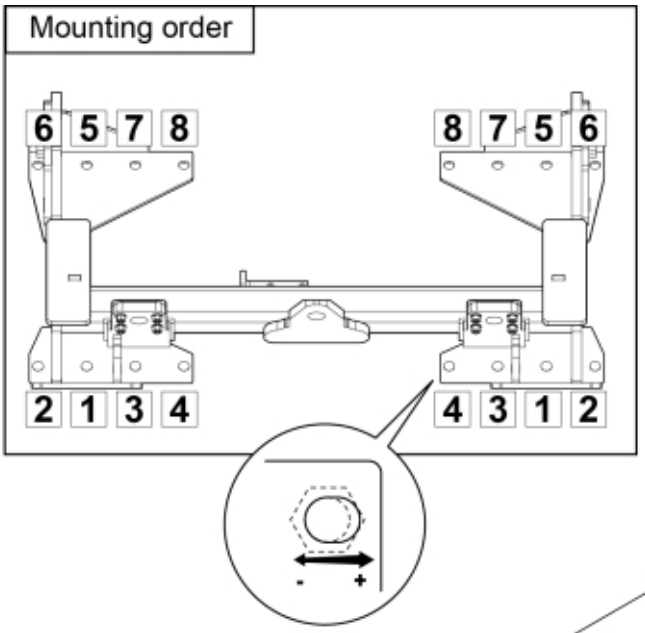

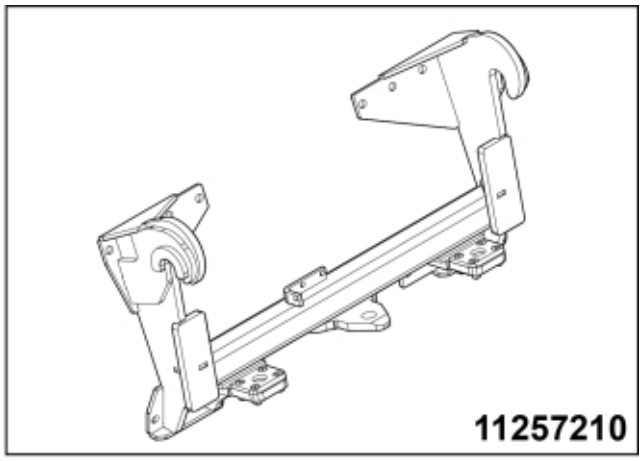

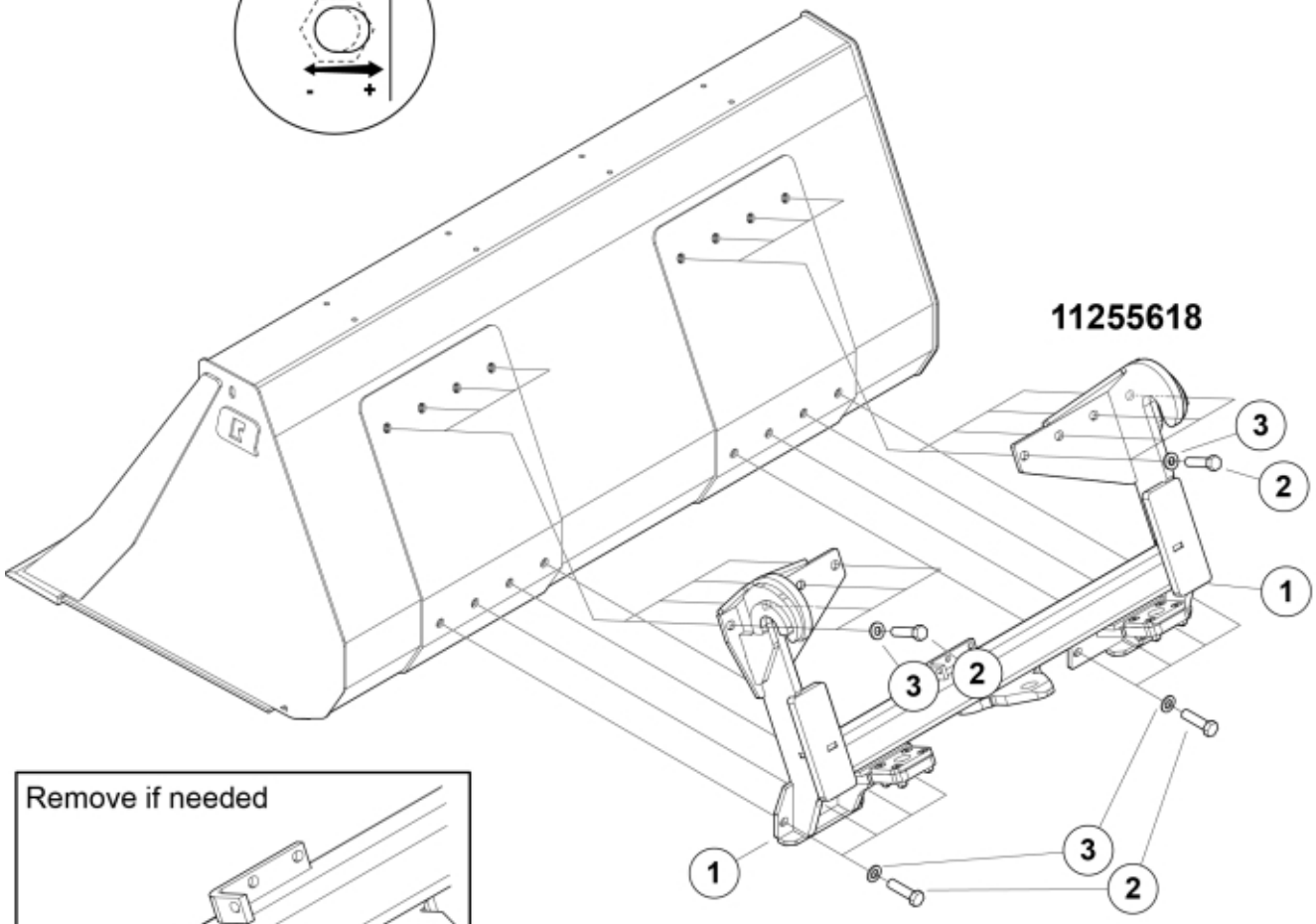

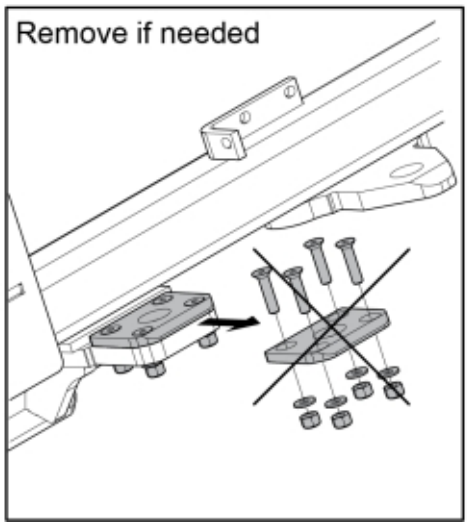

M 11255618_11257210

© 2025 Jost

Part assemblies Attachment kit Merlo ZM2

PartNo	Pos	Qty	Name	Specifications
11257210		1	Attachment kit Merlo ZM2	
60080396	1	1	Attachment Merlo ZM2	
60047988		2	Bolt kit	M16
5002153	2	8	• Screw	M6S M16 x 45
5051493	3	8	• Washer	M16

© 2025 Jost