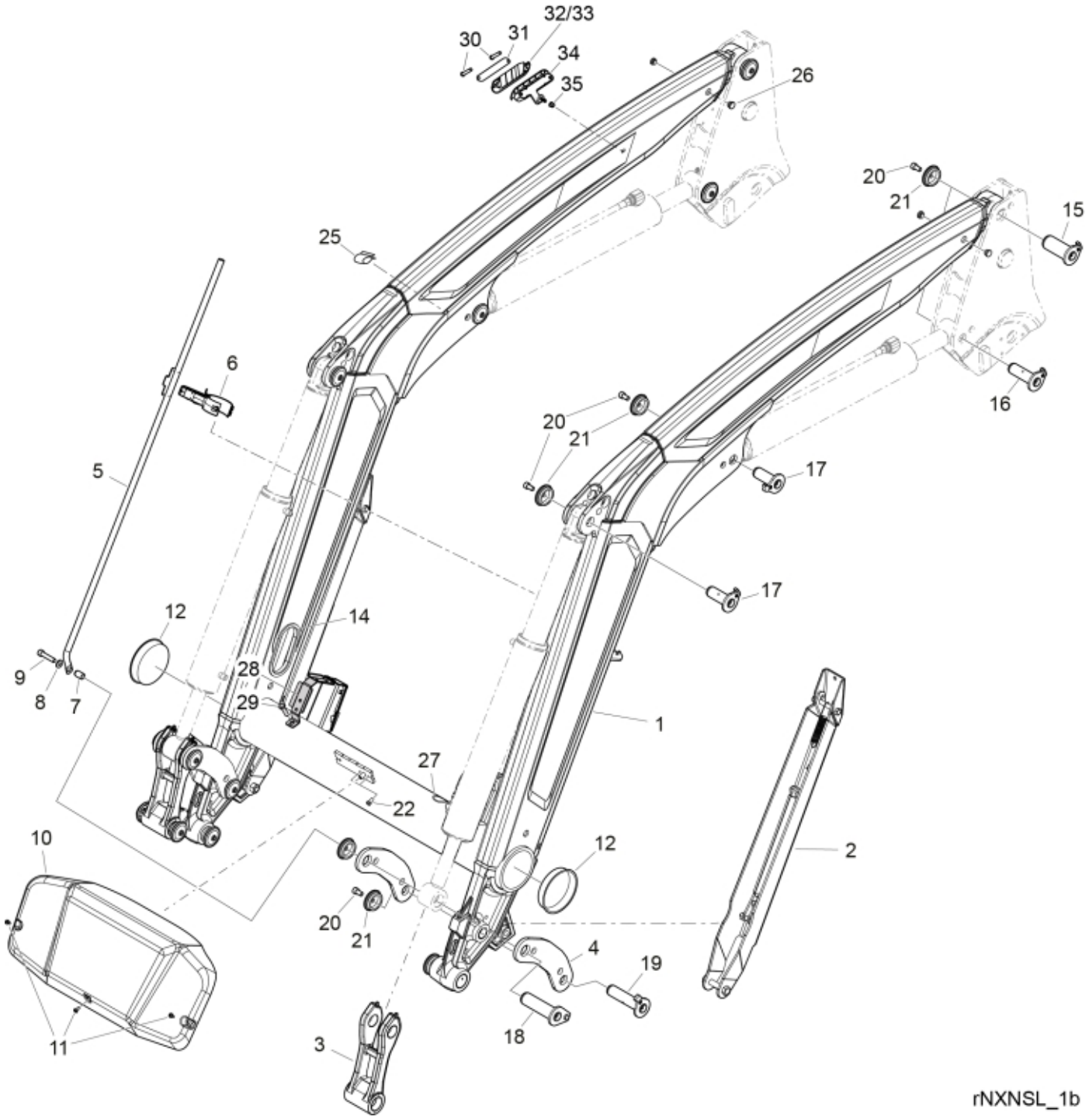
32/33
30
31
34
35
26
20
21
15
25
6
16
20
21
5
17
17
12
14
9
8
7
28
29
1
27
22
2
10
12
20
21
4
19
18
3
11
rNXNSL_1b

© 2025 Jost

Part assemblies Loader beam

PartNo	Pos	Qty	Name	Specifications
60107818-17	1	1	Loader beam w. bushings	Black Texture
60045911-17	2	2 PCS	Support leg	Black Texture
60018637	3	2	Link w. bushings	Glossy Black
60052804	3*	2	Link w. bushings	Glossy Black *for loaders with Euro/SMS
60062380-17	4	4	Link	Black Texture
5215219	5	1	Indicator rod	
5215209	6	1	Holder kit	
5215227	7	1	Spacer	
5013110	8	1	Washer	BRB 10.5x22x2
5050605	9	1	Screw	MC6S 10x50 Loc
60115321	10	1	Centre Cover	
5051982	11	3	Screw	M6x8
5053446	12	2	Cover	
60009870	14	2	Edge cover	16 mm
60000350	15	2	Pivot Pin	D=40, L=96 mm
60018047	16	2	Pivot Pin	D=30, L=96mm
60004177	17	4	Pivot Pin	D=30, L=80mm
60003247	18	2	Pivot Pin	D=35, L=127mm
60018046	19	2	Pivot Pin	D=30, L=127mm
5050608	20	15	Screw	MC6S M10x20 Loc
5215131	21	16	Locking cover	
5002058	22	2	Screw	M6S 8x16
60011125	25	2	Cover	
60021154	26	4	Plug	
60008713	27	2	Edge cover	
60070968	28	2	Hose guide	
5002077	29	2	Screw	M6S 10x30
5053656	30	2	Screw	M8x60
60117642	31	1	Clamp plate	
60117558	32	1	Hose clamp	Upper part
60117559	33	1	Hose clamp L3	Upper part
60129942	34	1	Hose clamp	Lower part
5011921	35	1	Nut	M6MF M8

© 2025 Jost